Face-Guarding Polyhedra

CCCG 2013

Giovanni Viglietta

School of Computer Science, Carleton University, Canada

Waterloo – August 10, 2013

The Window Positioning Problem

The Window Positioning Problem

The Window Positioning Problem

The Window Positioning Problem

The Window Positioning Problem

The Window Positioning Problem

The Window Positioning Problem

Face-guarding polyhedra

Problem: What is the minimum number g of faces that have to be selected to guard the interior of a polyhedron with f faces?

Face-guarding polyhedra

Problem: What is the minimum number g of faces that have to be selected to guard the interior of a polyhedron with f faces?

Theorem (Souvaine–Veroy–Winslow, 2011)

For (closed) face guards in orthogonal polyhedra,

$$\left\lfloor \frac{f}{7} \right\rfloor \leqslant g(f) \leqslant \left\lfloor \frac{f}{6} \right\rfloor$$

Theorem (Souvaine–Veroy–Winslow, 2011)

For (closed) face guards in general polyhedra,

$$\left\lfloor \frac{f}{5} \right\rfloor \leqslant g(f) \leqslant \left\lfloor \frac{f}{2} \right\rfloor$$

Face-guarding polyhedra

Open problems (Souvaine–Veroy–Winslow, 2011)

- Study *open*, as well as closed, face guards.
- Study polyhedra of arbitrary genus.
- Determine the complexity of minimizing face guards.

Face-guarding polyhedra

Open problems (Souvaine–Veroy–Winslow, 2011)

- Study *open*, as well as closed, face guards.
- Study polyhedra of arbitrary genus.
- Determine the complexity of minimizing face guards.

Theorem (Iwamoto–Kitagaki–Morita, 2012)

Minimizing face guards in polyhedral terrains in NP-hard.

(Not applicable to polyhedra)

Guards patrolling on faces

Face guards: a model for guards *roaming* over a face?

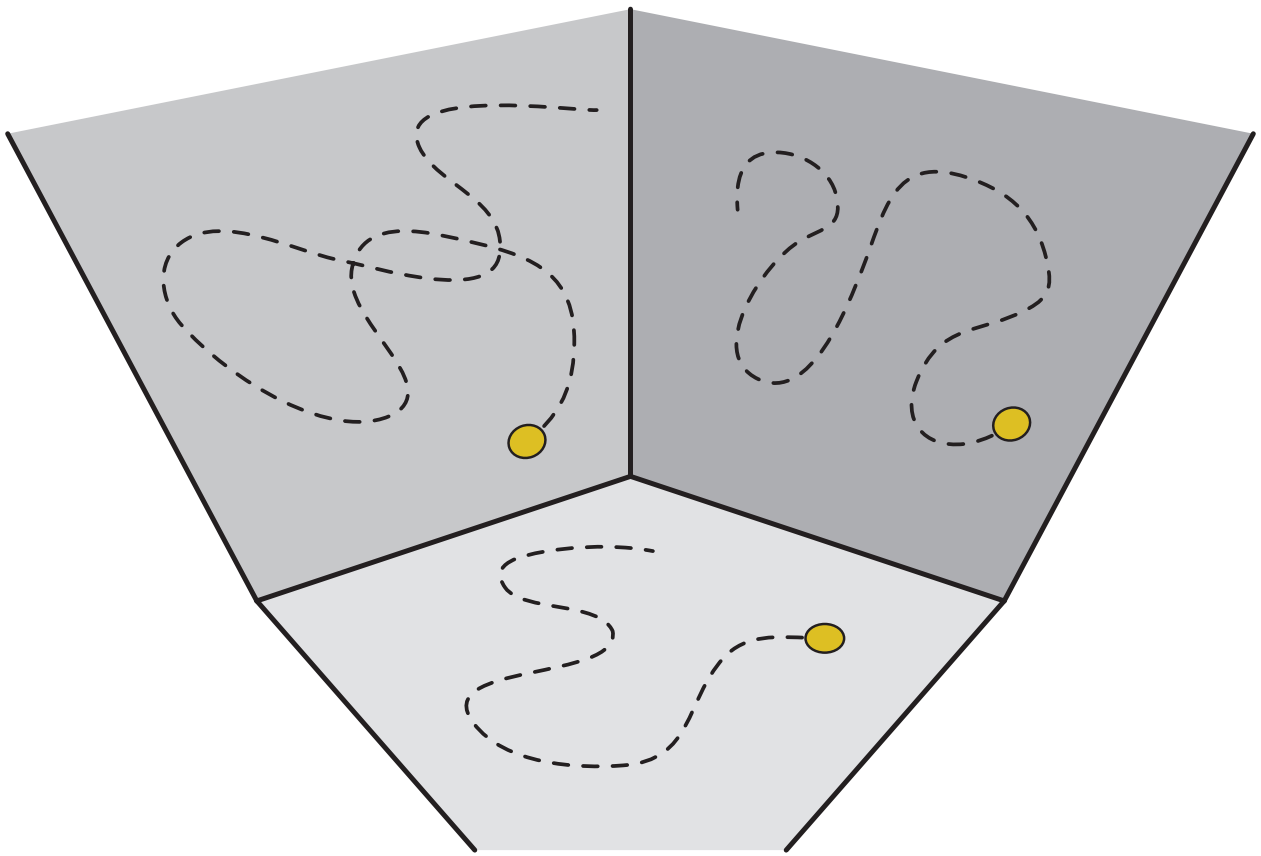

Guards patrolling on faces

An edge guard may not be "replaceable" by finitely many of its points.

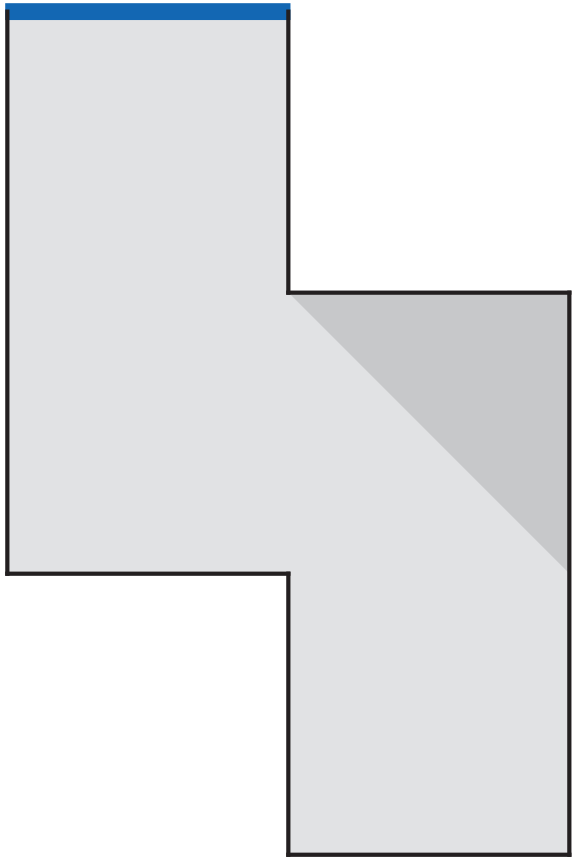

Guards patrolling on faces

An edge guard may not be "replaceable" by finitely many of its points.

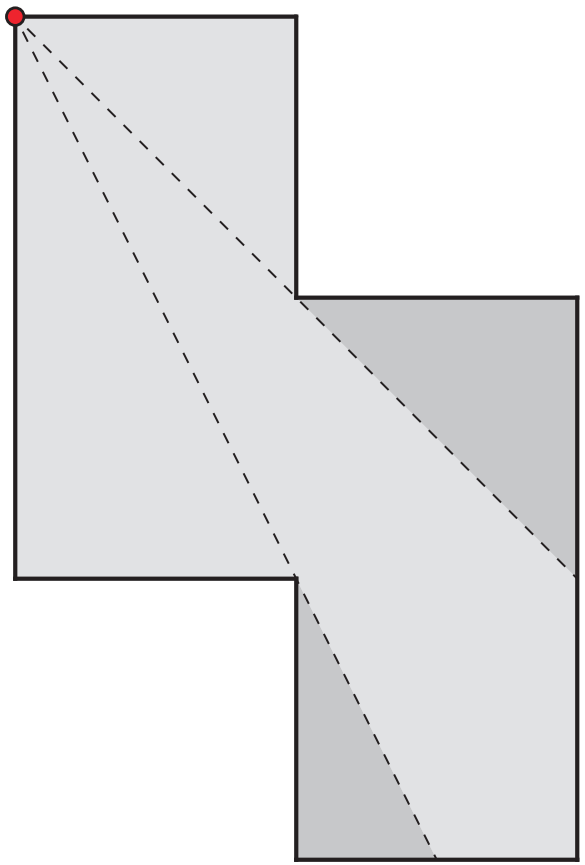

Guards patrolling on faces

An edge guard may not be "replaceable" by finitely many of its points.

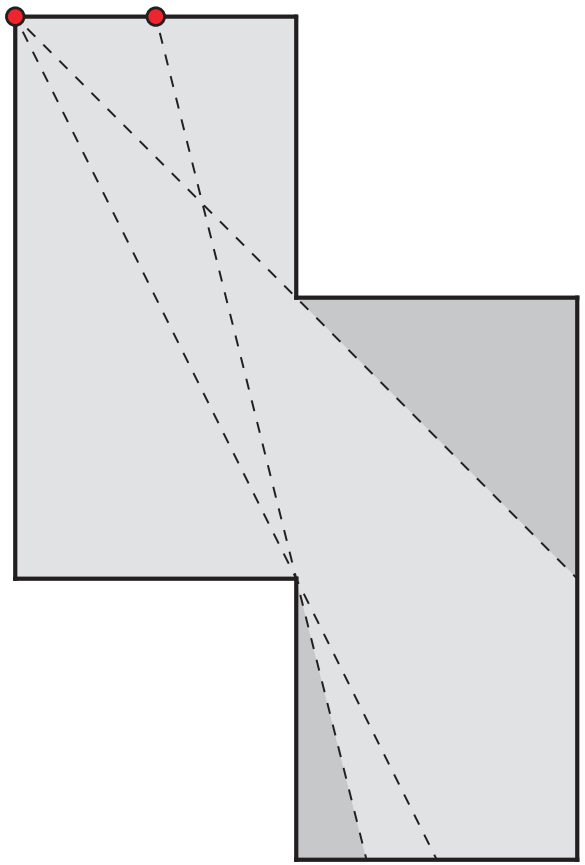

Guards patrolling on faces

An edge guard may not be "replaceable" by finitely many of its points.

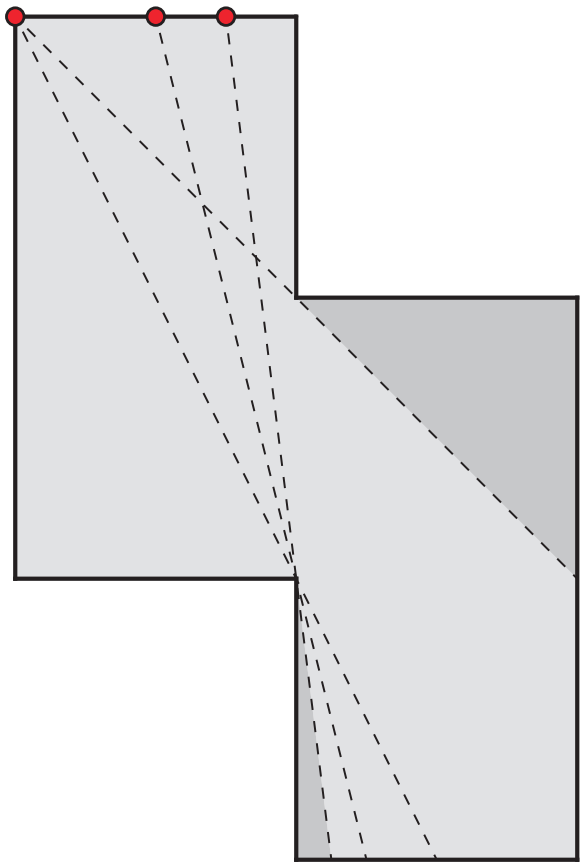

Guards patrolling on faces

An edge guard may not be "replaceable" by finitely many of its points.

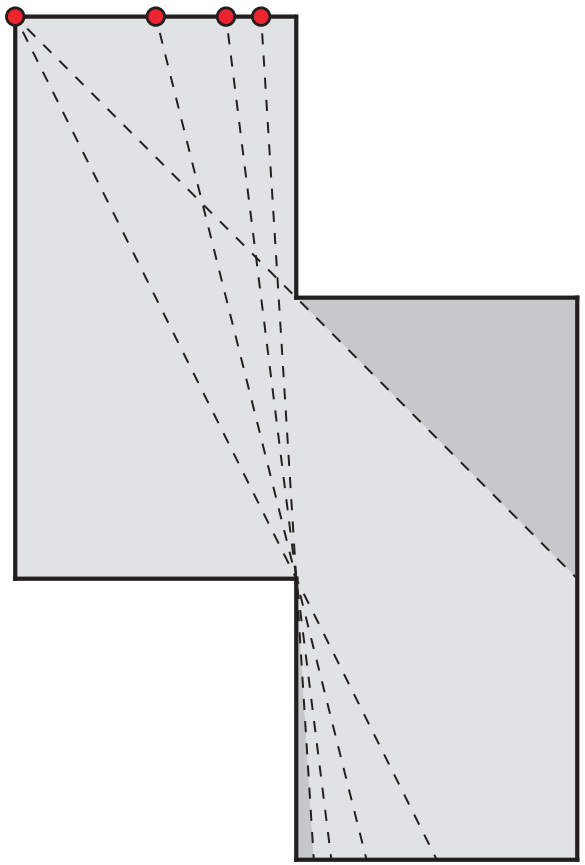

Guards patrolling on faces

An edge guard may not be "replaceable" by finitely many of its points.

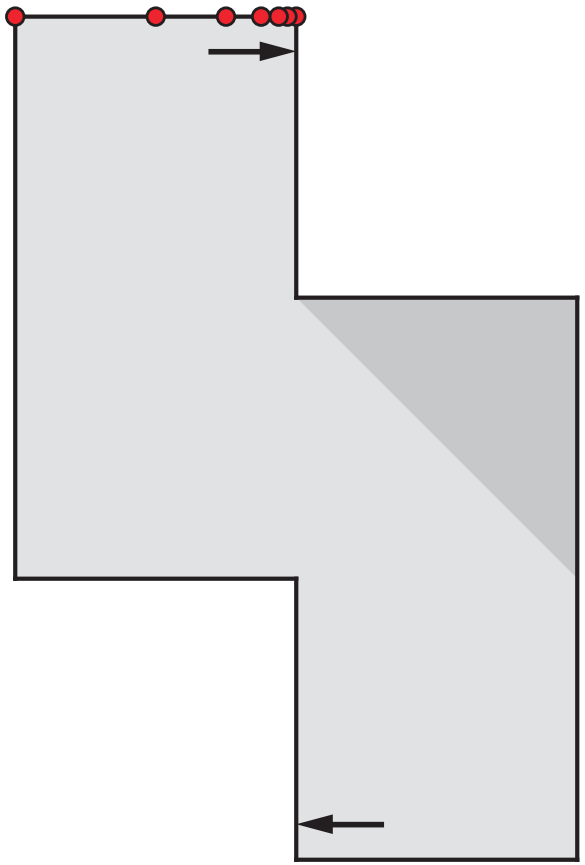

The right endpoint must be a limit point of the guarding set.

Guards patrolling on faces

Some faces represent guards patrolling on paths of quadratic "complexity" (or quadratically many segment guards).

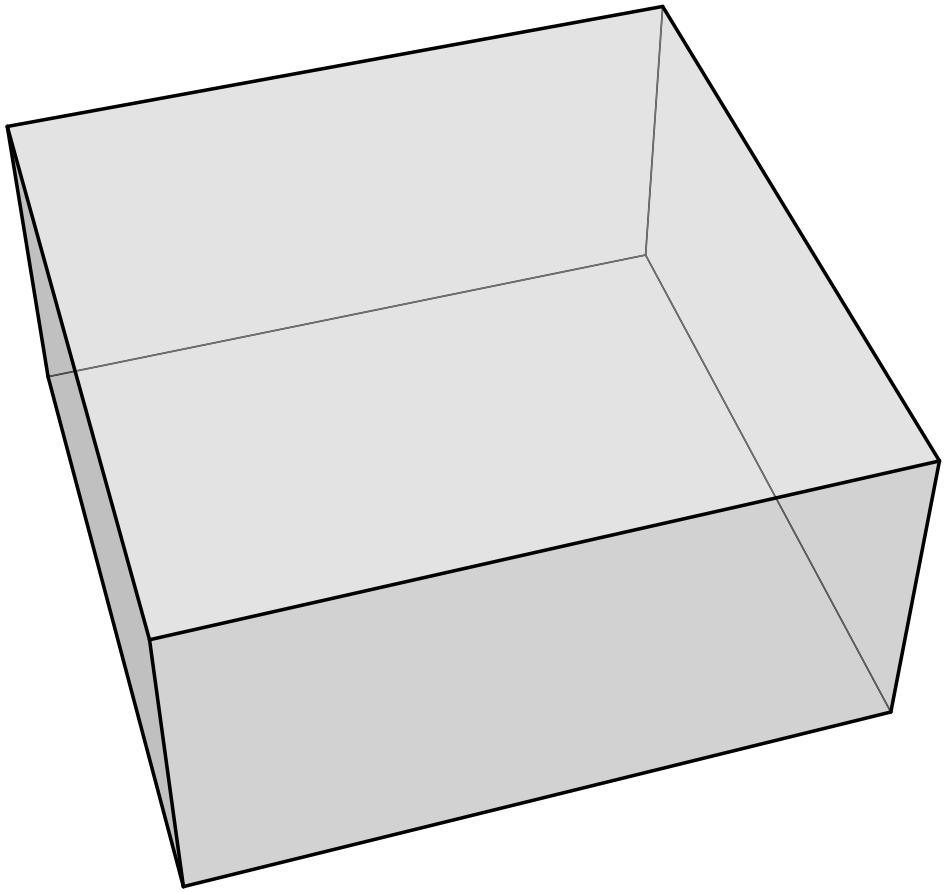

Guards patrolling on faces

Some faces represent guards patrolling on paths of quadratic "complexity" (or quadratically many segment guards).

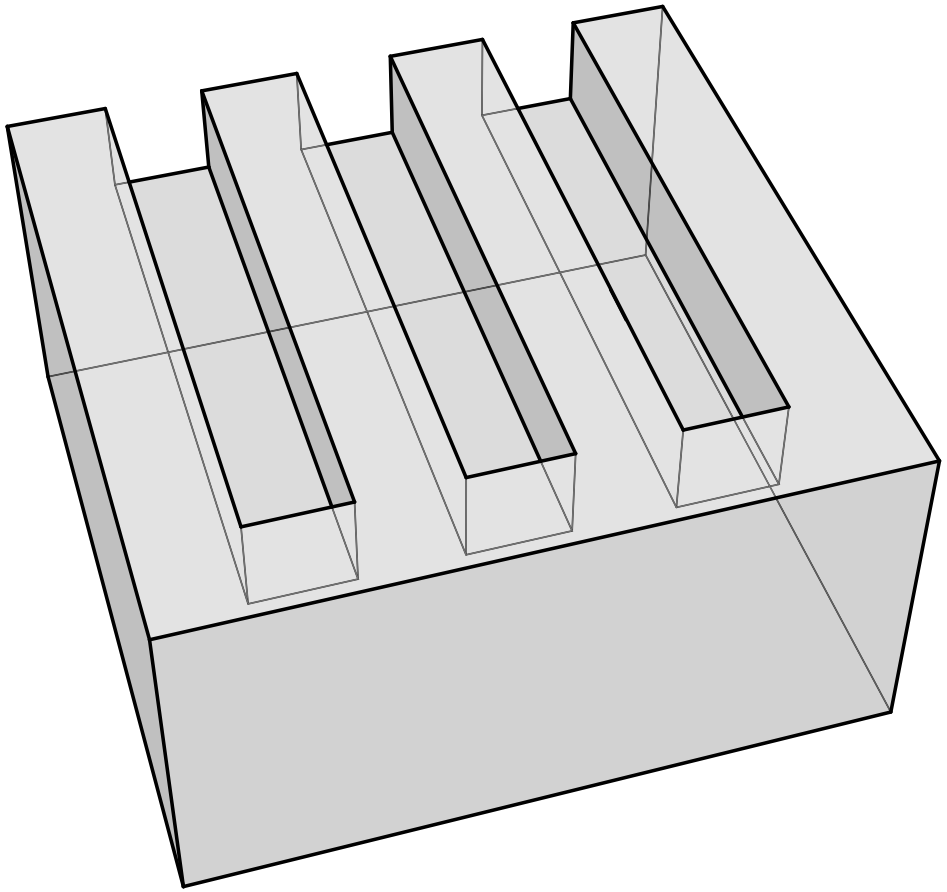

Guards patrolling on faces

Some faces represent guards patrolling on paths of quadratic "complexity" (or quadratically many segment guards).

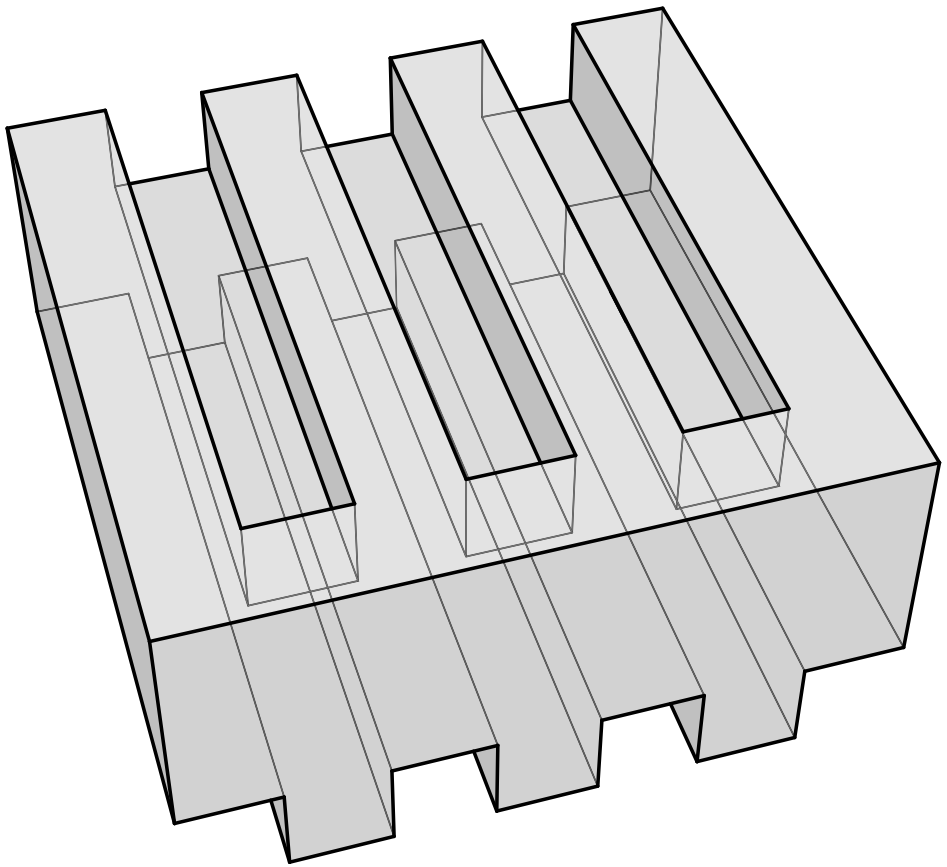

Guards patrolling on faces

Some faces represent guards patrolling on paths of quadratic "complexity" (or quadratically many segment guards).

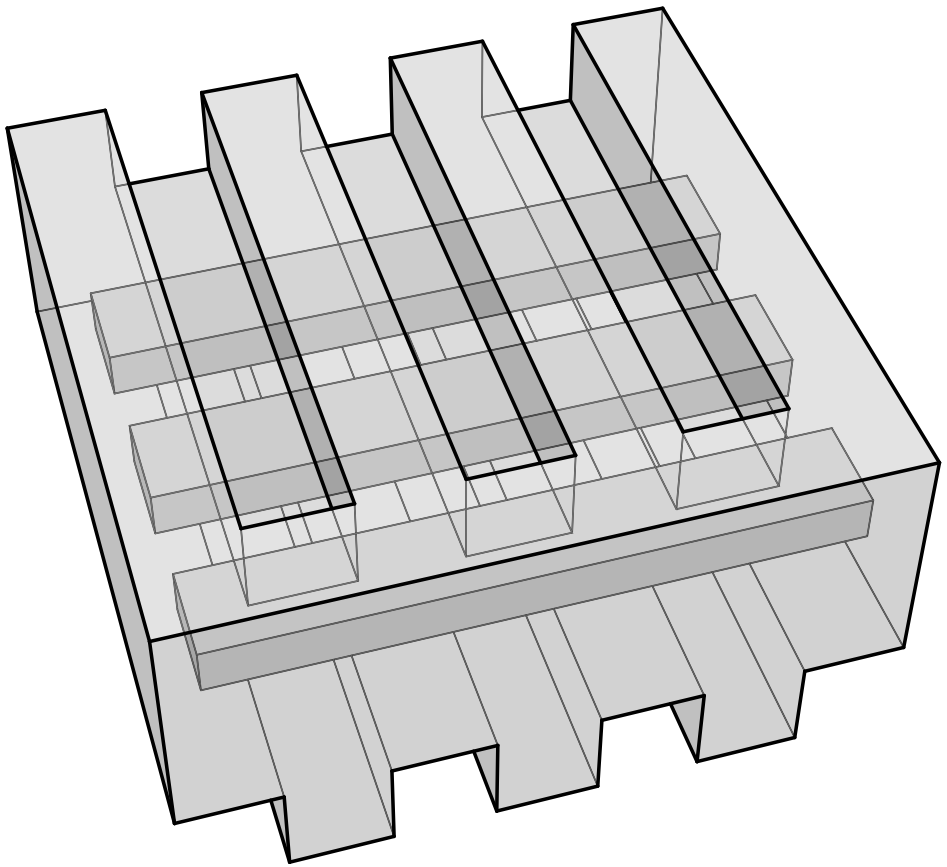

Guards patrolling on faces

Some faces represent guards patrolling on paths of quadratic "complexity" (or quadratically many segment guards).

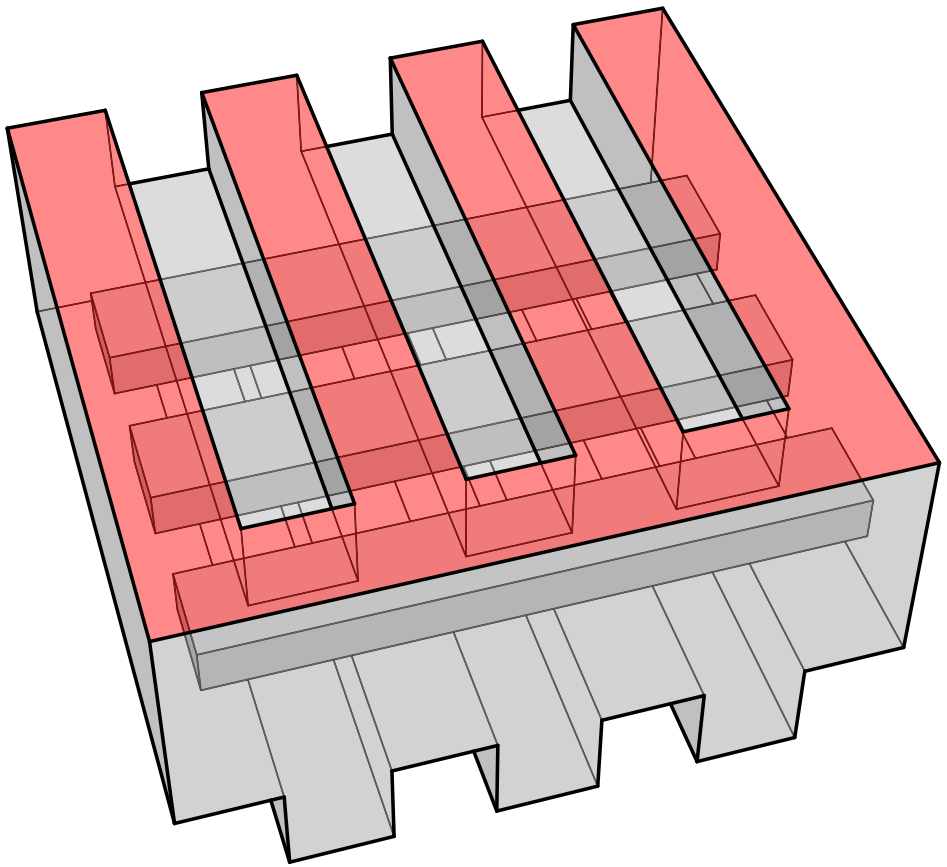

Guards patrolling on faces

Some faces represent guards patrolling on paths of quadratic "complexity" (or quadratically many segment guards).

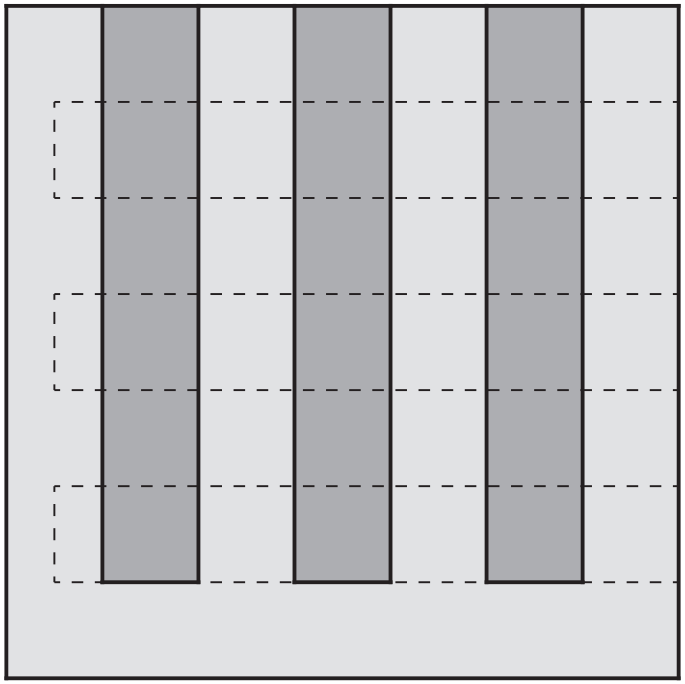

Guards patrolling on faces

Some faces represent guards patrolling on paths of quadratic "complexity" (or quadratically many segment guards).

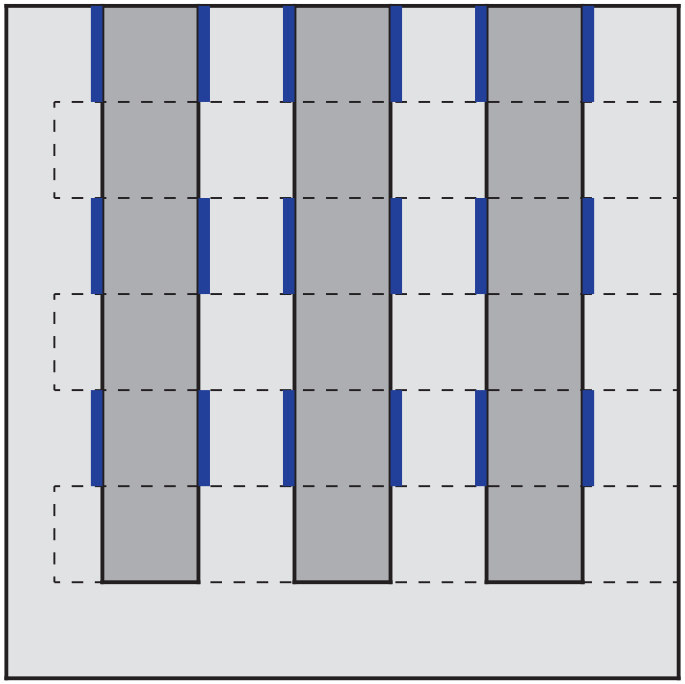

Guards patrolling on faces

Some faces represent guards patrolling on paths of quadratic "complexity" (or quadratically many segment guards).

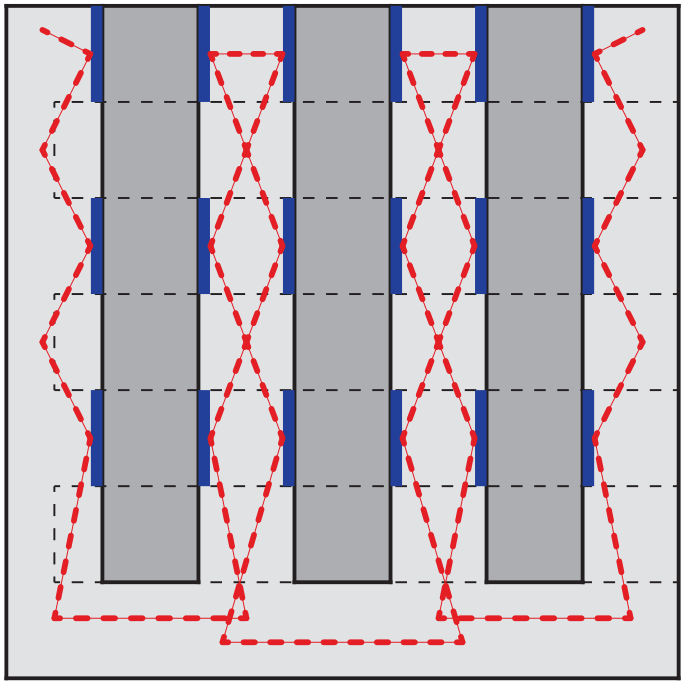

Guards patrolling on faces

Some faces represent guards patrolling on paths of quadratic "complexity" (or quadratically many segment guards).

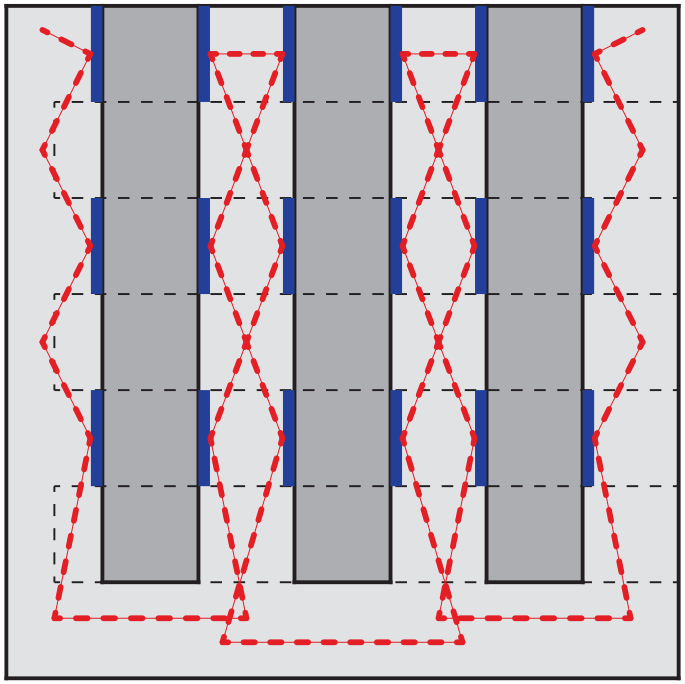

The face guard model is insensitive to the complexity of a guard's path, and is better suited as a model for entities that are naturally constrained to live on a face (e.g., flat windows).

Upper bound on face guard numbers

Theorem

For open or closed face guards and c-oriented polyhedra,

$$g(f) \leqslant \left\lfloor \frac{f}{2} - \frac{f}{c} \right\rfloor$$

Upper bound on face guard numbers

Theorem

For open or closed face guards and c-oriented polyhedra,

$$g(f) \leqslant \left\lfloor \frac{f}{2} - \frac{f}{c} \right\rfloor$$

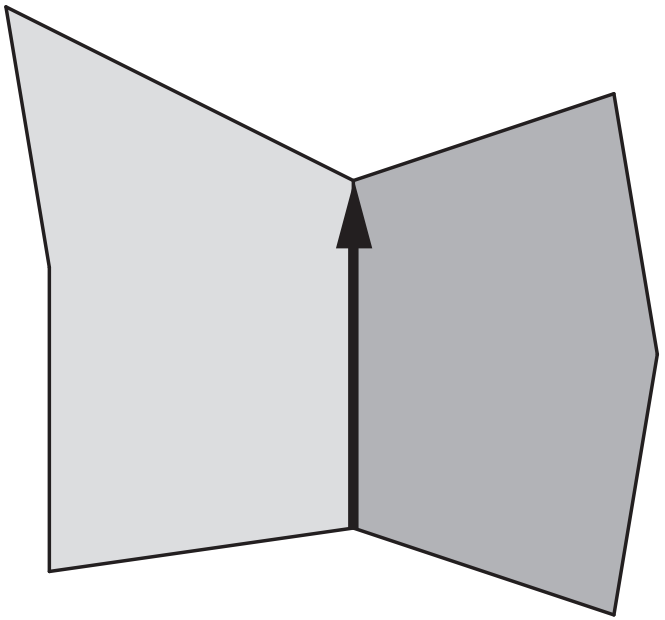

Upper bound on face guard numbers

Theorem

For open or closed face guards and c-oriented polyhedra,

$$g(f) \leqslant \left\lfloor \frac{f}{2} - \frac{f}{c} \right\rfloor$$

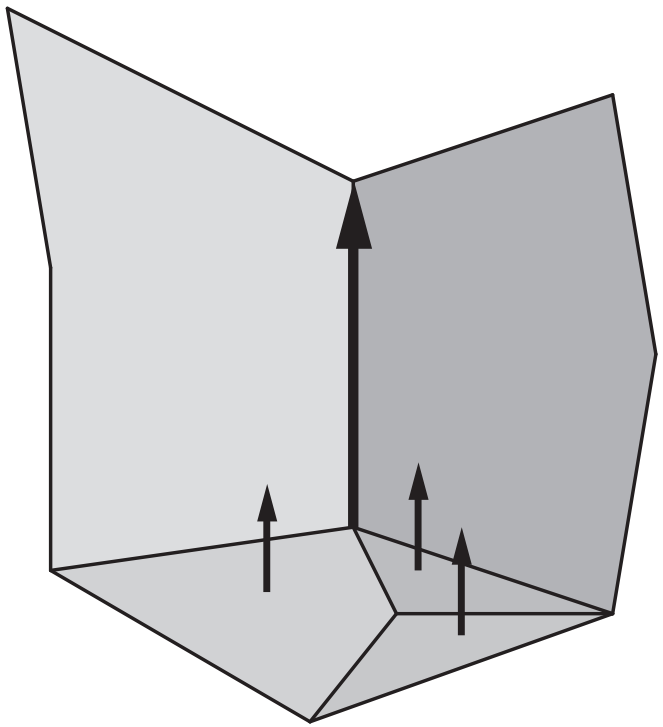

Upper bound on face guard numbers

Theorem

For open or closed face guards and c-oriented polyhedra,

$$g(f) \leqslant \left\lfloor \frac{f}{2} - \frac{f}{c} \right\rfloor$$

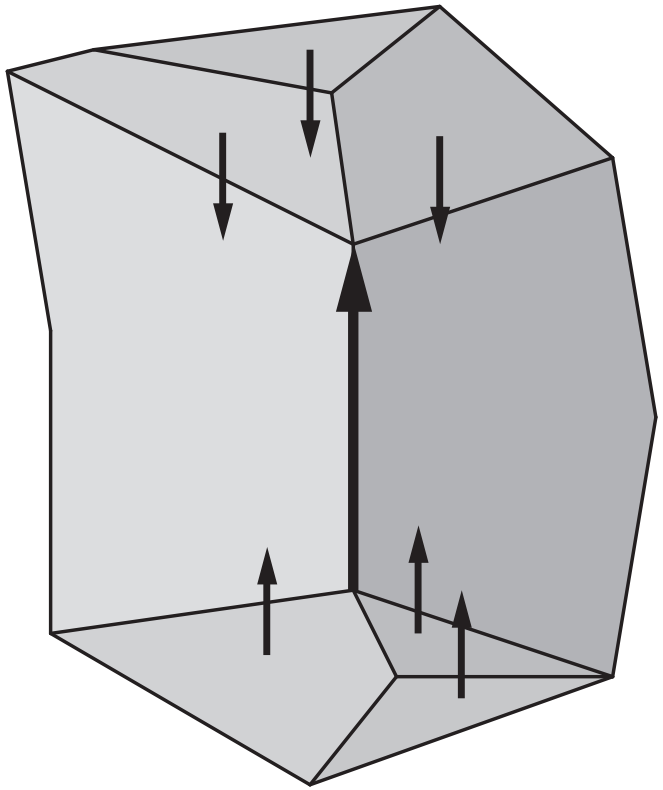

Upper bound on face guard numbers

Theorem

For open or closed face guards and c-oriented polyhedra,

$$g(f) \leqslant \left\lfloor \frac{f}{2} - \frac{f}{c} \right\rfloor$$

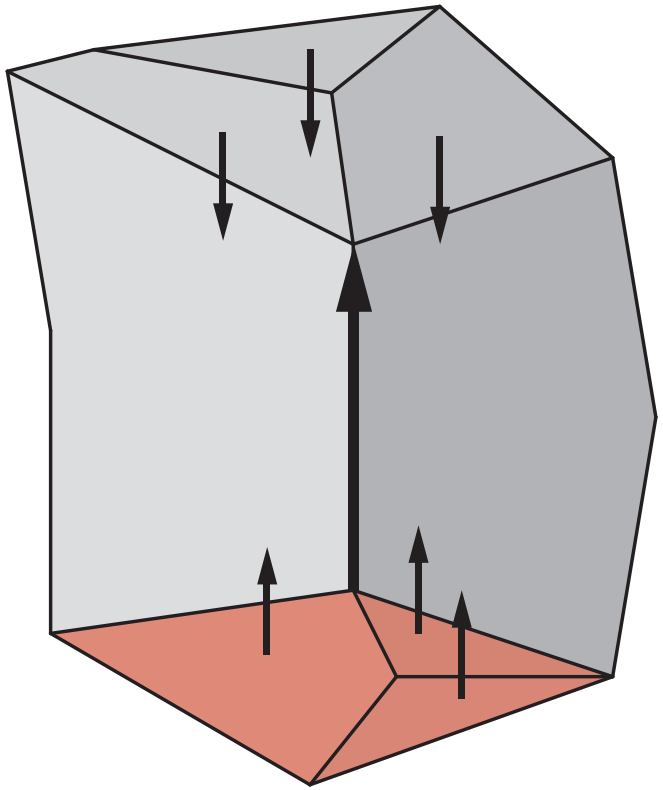

Upper bound on face guard numbers

Theorem

For open or closed face guards and c-oriented polyhedra,

$$g(f) \leqslant \left\lfloor \frac{f}{2} - \frac{f}{c} \right\rfloor$$

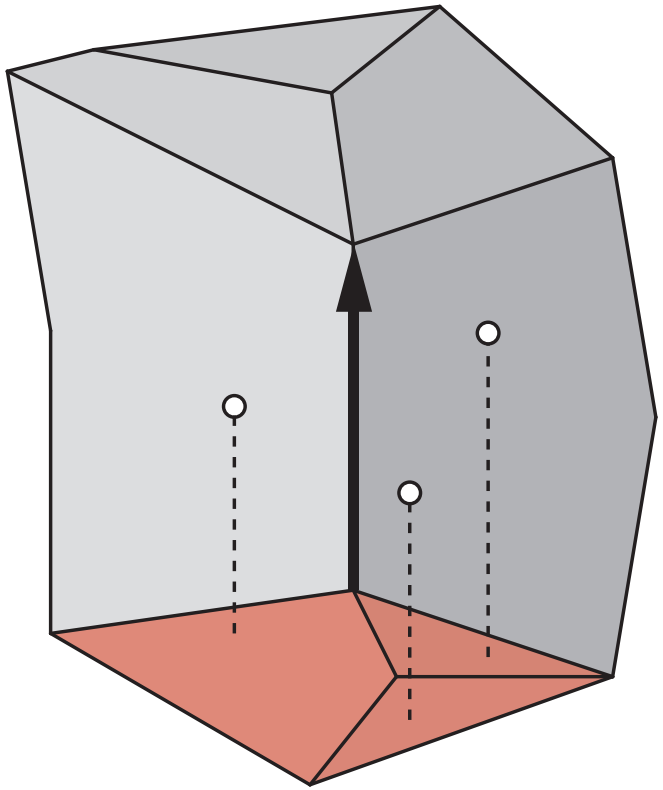

Upper bound on face guard numbers

Theorem

For open or closed face guards and c-oriented polyhedra,

$$g(f) \leqslant \left\lfloor \frac{f}{2} - \frac{f}{c} \right\rfloor$$

- For orthogonal polyhedra ($c = 3$): $\left\lfloor \frac{\mathbf{f}}{\mathbf{6}} \right\rfloor$ face guards.
- For 4-oriented polyhedra: $\left\lfloor \frac{\mathbf{f}}{\mathbf{4}} \right\rfloor$ face guards.
- For general polyhedra ($c = f$): $\left\lfloor \frac{\mathbf{f}}{\mathbf{2}} \right\rfloor - \mathbf{1}$ face guards.

Lower bounds for orthogonal polyhedra

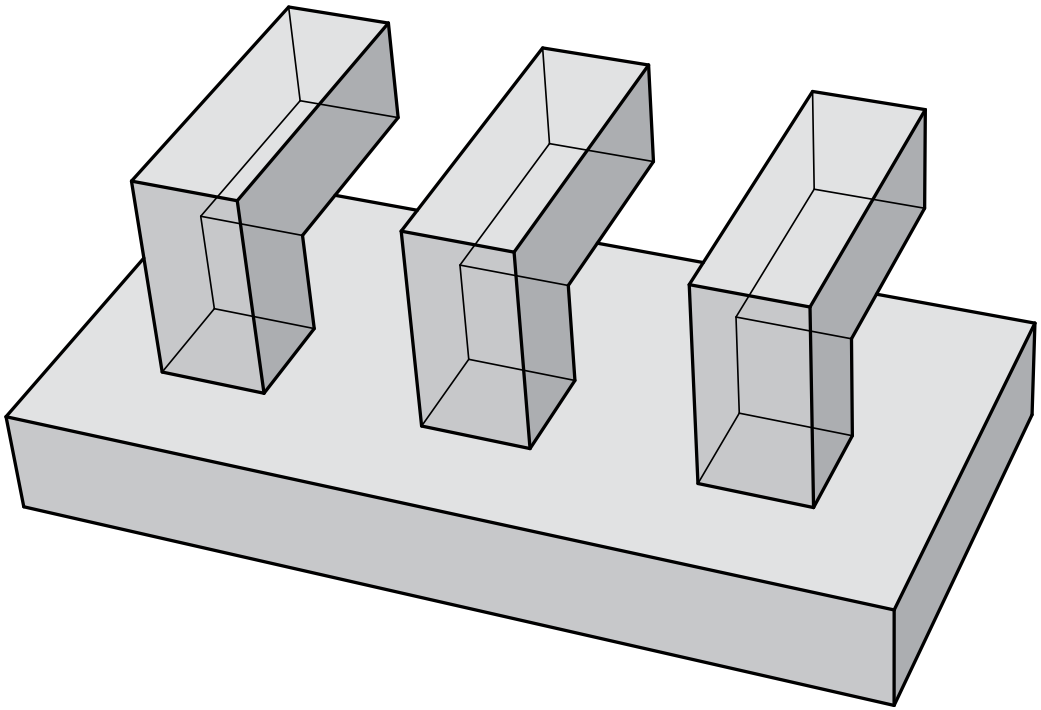

Lower bounds for orthogonal polyhedra

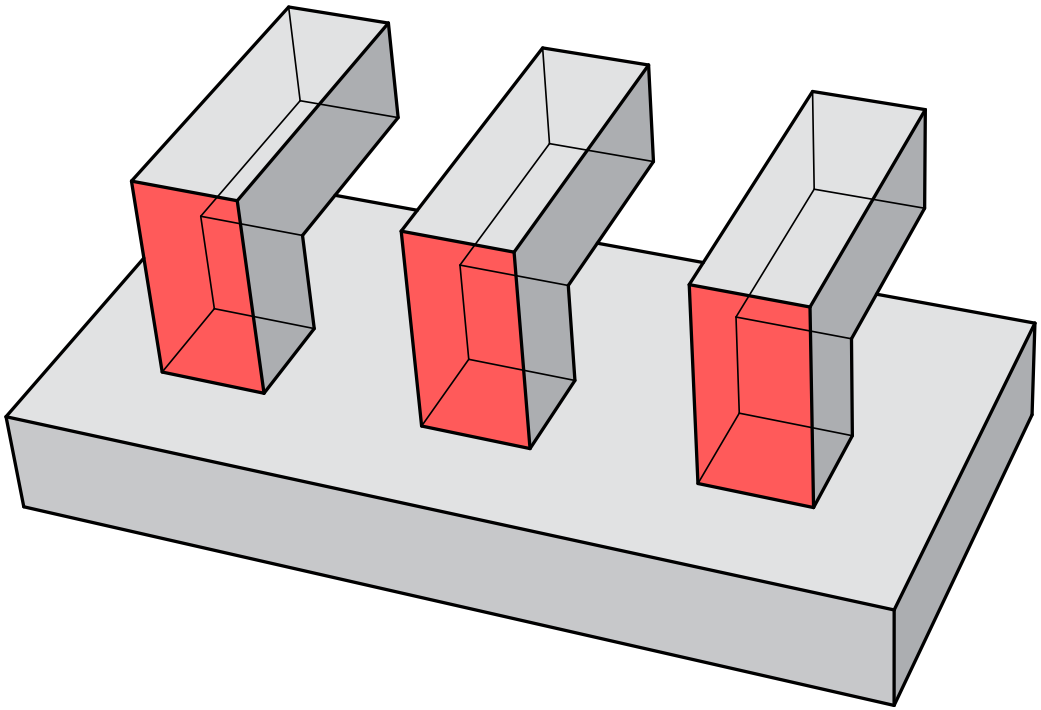

Lower bounds for orthogonal polyhedra

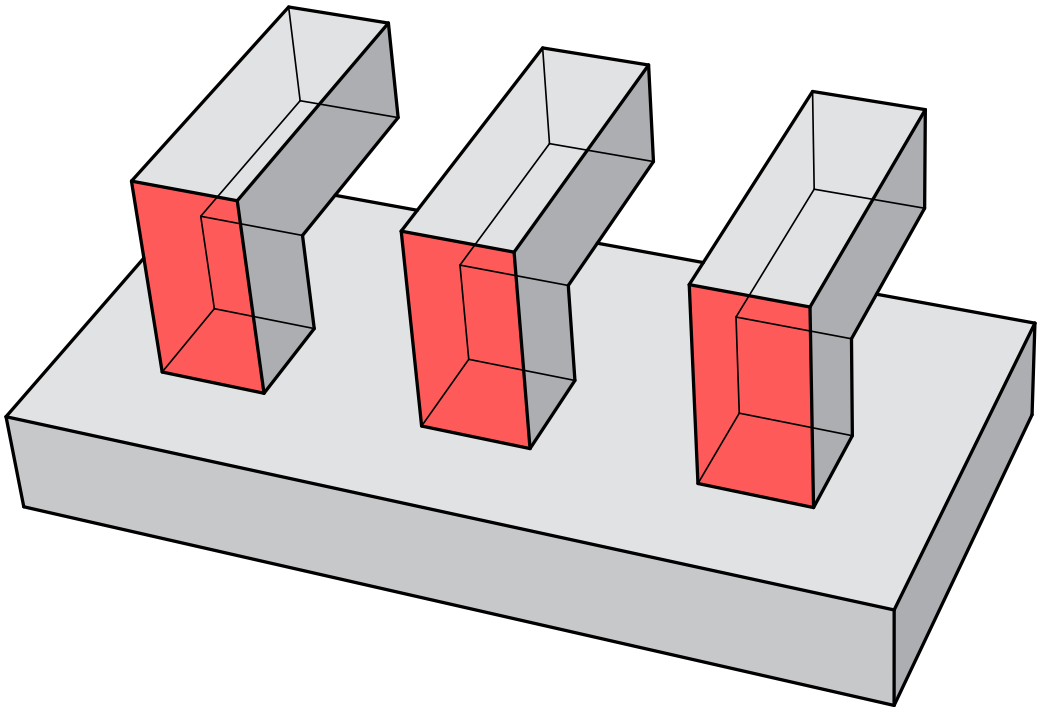

Theorem

For closed face guards in orthogonal polyhedra, $g(f) \geqslant \left\lfloor \frac{f}{7} \right\rfloor$.

Lower bounds for orthogonal polyhedra

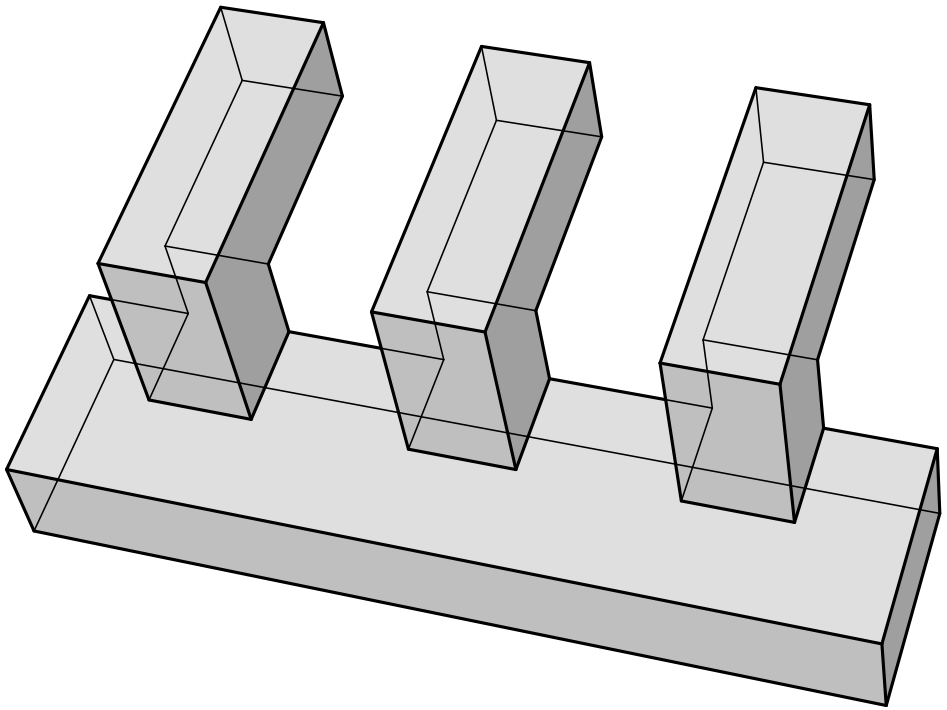

Lower bounds for orthogonal polyhedra

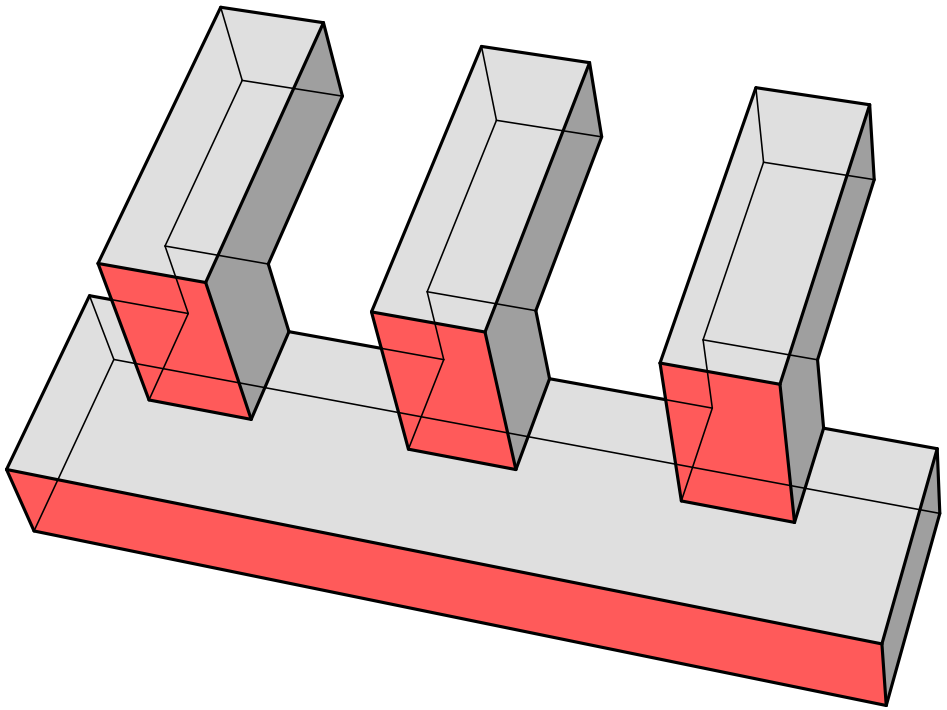

Lower bounds for orthogonal polyhedra

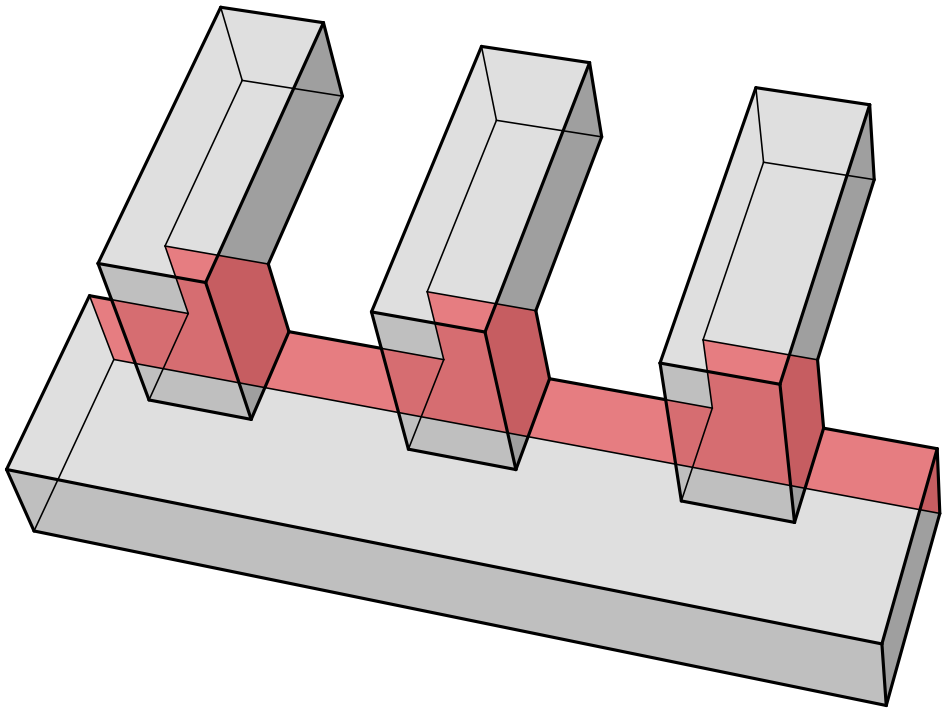

Lower bounds for orthogonal polyhedra

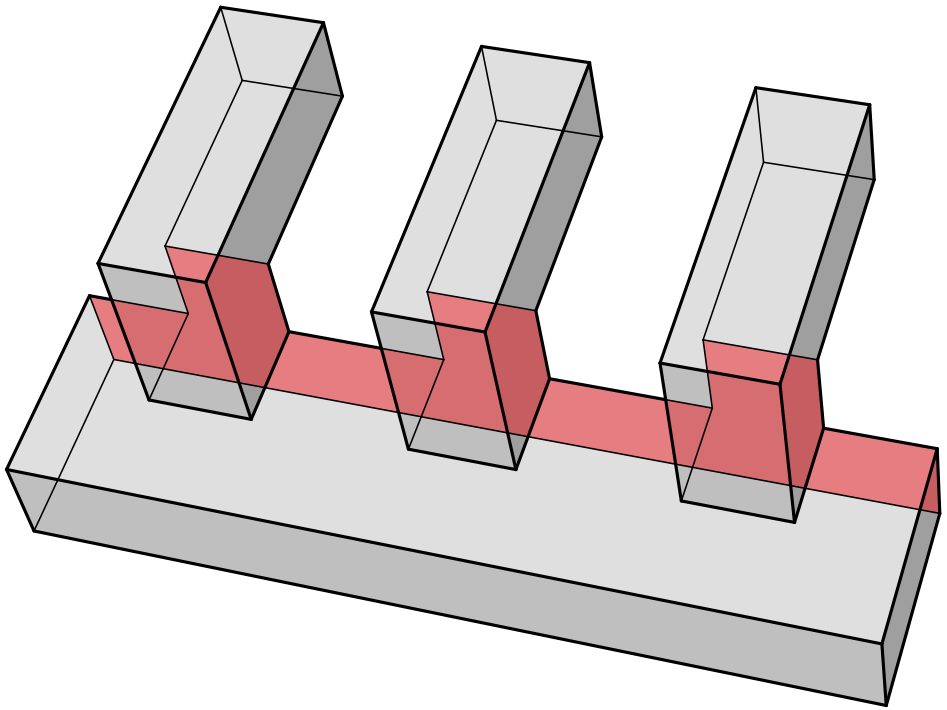

Theorem

For open face guards in orthogonal polyhedra, $g(f) = \lfloor \frac{f}{6} \rfloor$.

Lower bounds for 4-oriented polyhedra

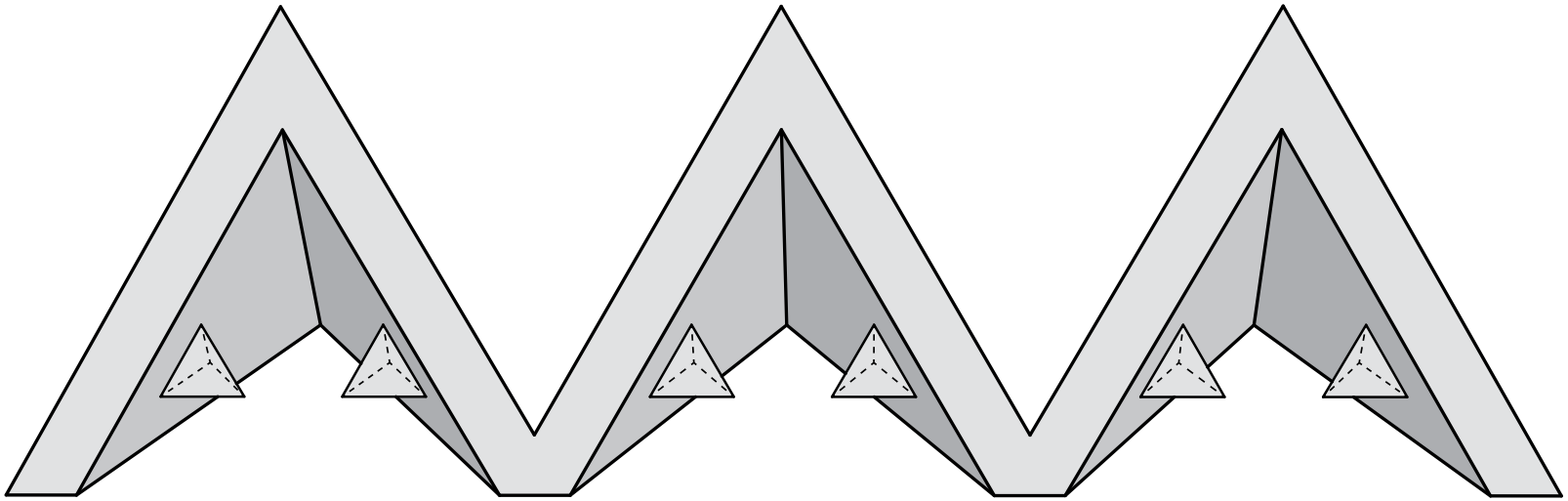

Lower bounds for 4-oriented polyhedra

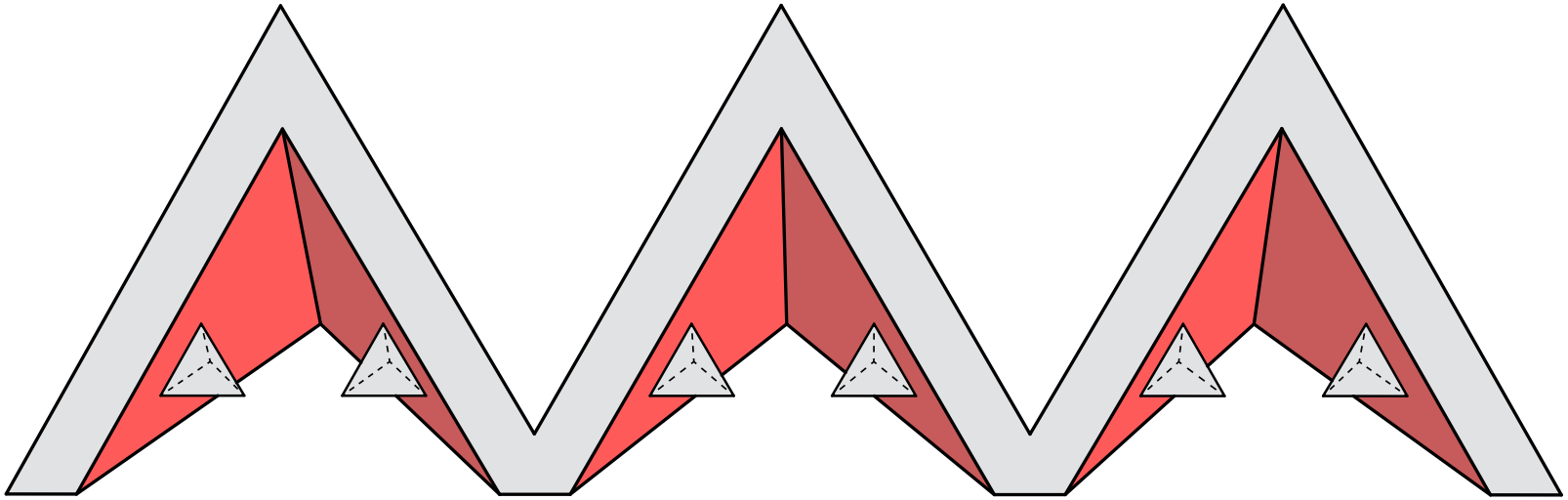

Lower bounds for 4-oriented polyhedra

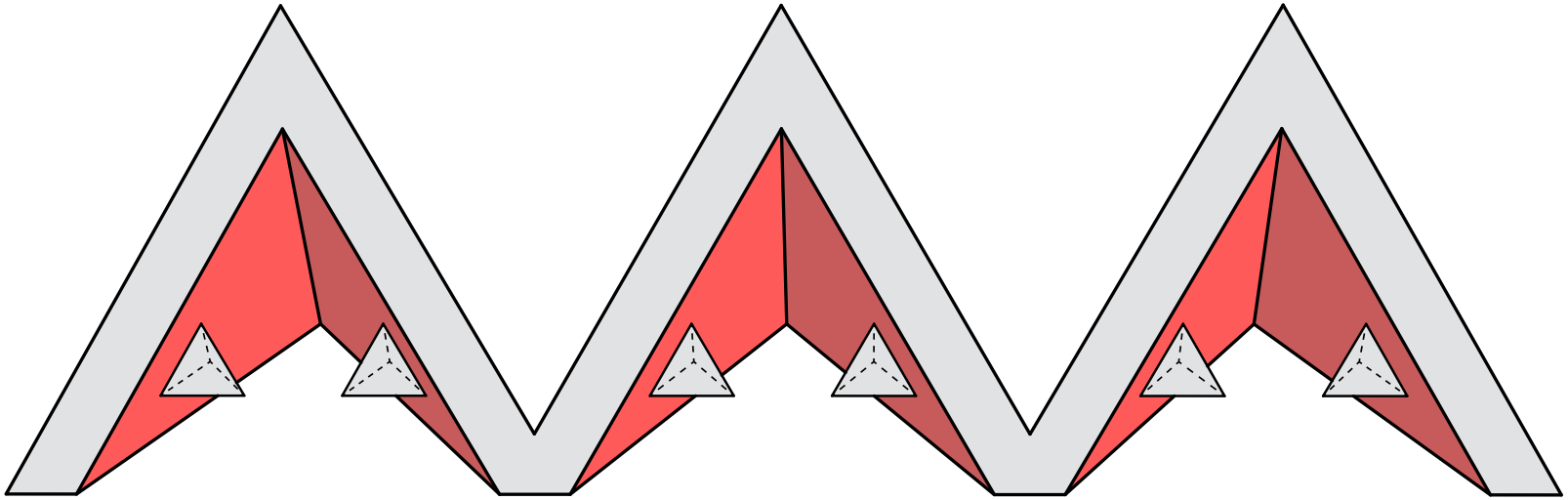

Theorem

For closed face guards in 4-oriented polyhedra, $g(f) \geqslant \left\lfloor \frac{f}{5} \right\rfloor$.

Lower bounds for 4-oriented polyhedra

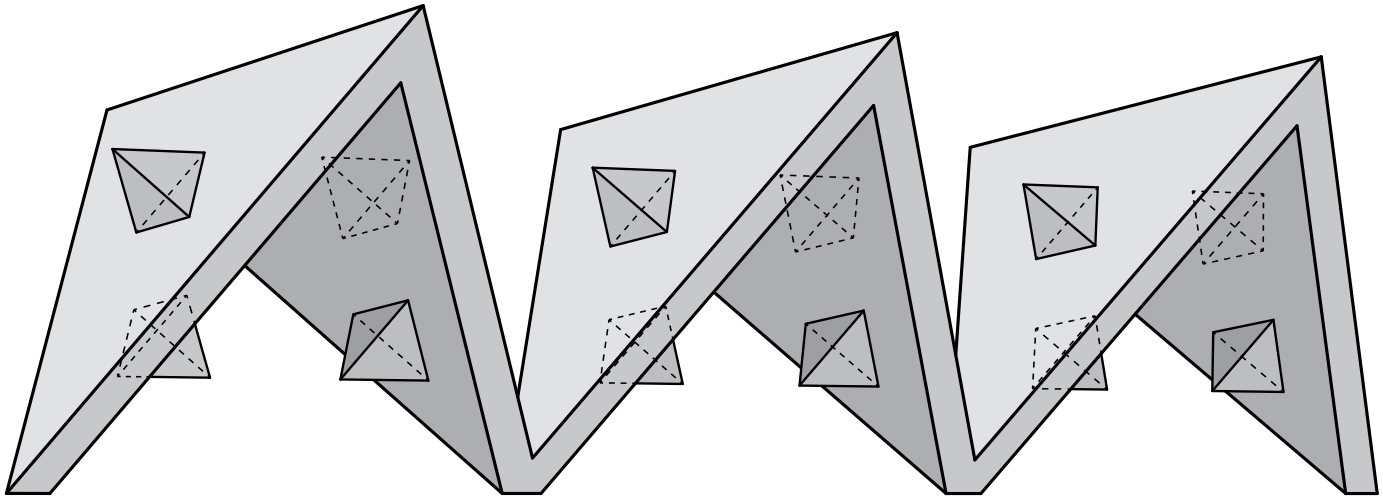

Lower bounds for 4-oriented polyhedra

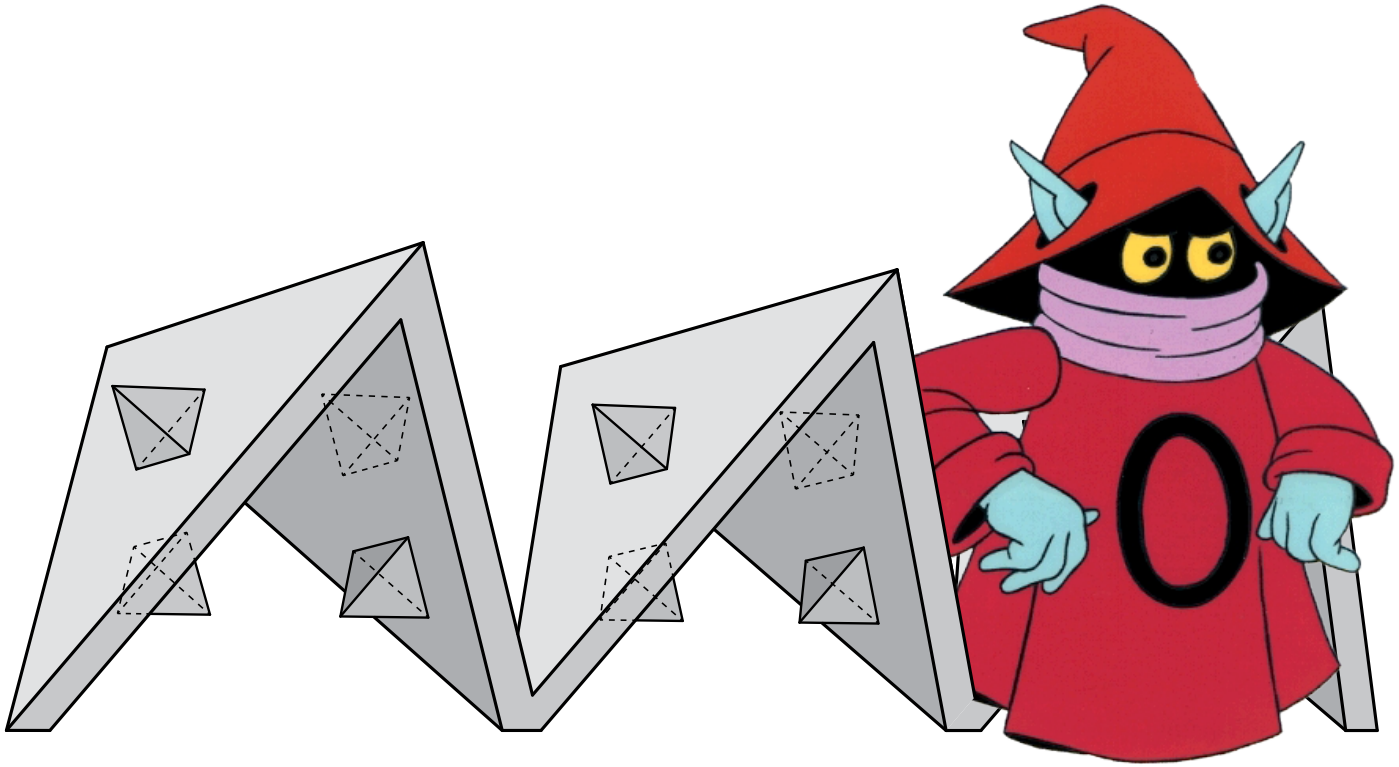

Lower bounds for 4-oriented polyhedra

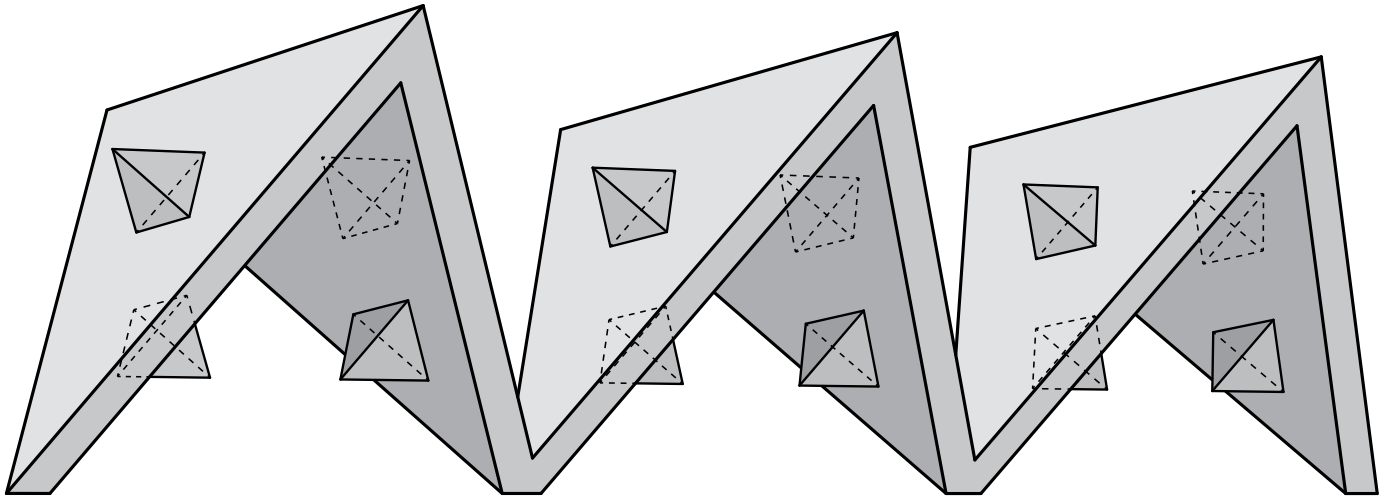

Lower bounds for 4-oriented polyhedra

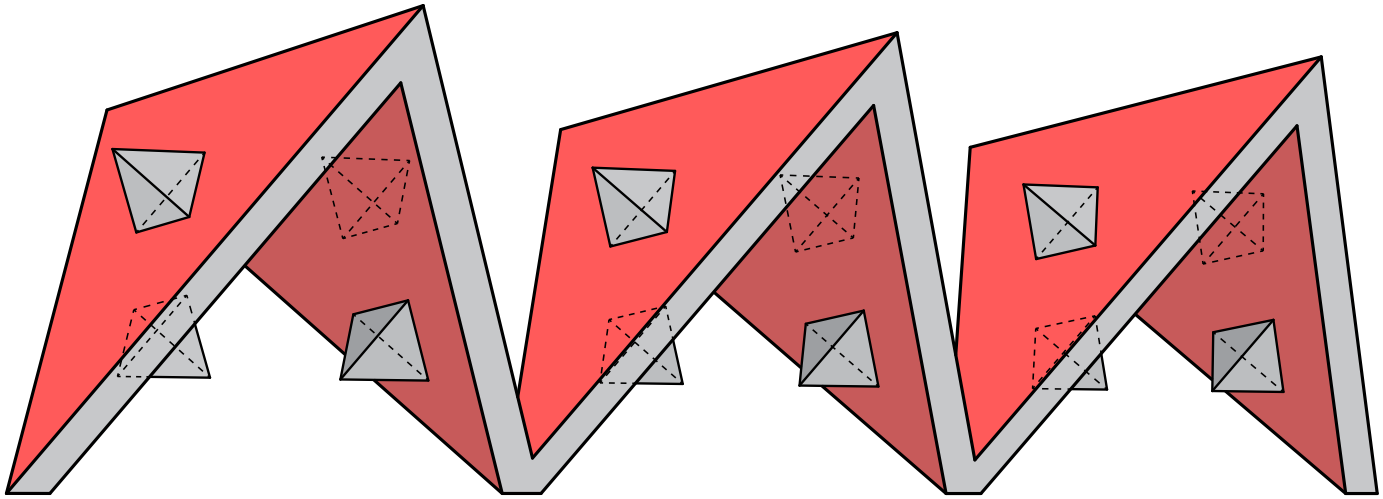

Lower bounds for 4-oriented polyhedra

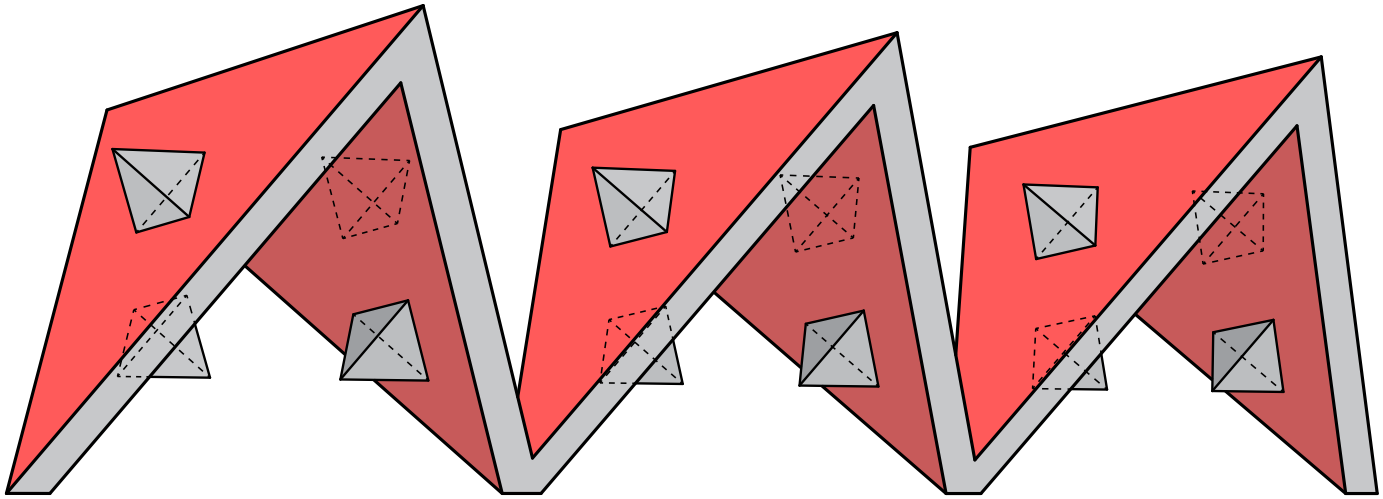

Theorem

For open face guards in 4-oriented polyhedra, $g(f) = \lfloor \frac{f}{4} \rfloor$.

Hardness of approximation

Theorem

The minimum number of (open or closed) face guards is NP-hard to approximate within a factor of $\Omega(\log f)$.

Hardness of approximation

Theorem

The minimum number of (open or closed) face guards is NP-hard to approximate within a factor of $\Omega(\log f)$.

Reduction from Set Cover.

Let $\mathcal{U} = \{1, \cdots, n\}$ and $\mathcal{S} \subseteq \mathcal{P}(\mathcal{U})$, with $|\mathcal{S}| = m$.

We construct an orthogonal polyhedron with $f = O(mn)$ faces that is guardable by $k+1$ faces iff $\mathcal{U}$ is the union of k elements of $\mathcal{S}$.

The theorem follows from the inapproximability of Set Cover.

Hardness of approximation

Theorem

The minimum number of (open or closed) face guards is NP-hard to approximate within a factor of $\Omega(\log f)$.

$$\mathcal{U} = \{1, 2, 3, 4\}$$

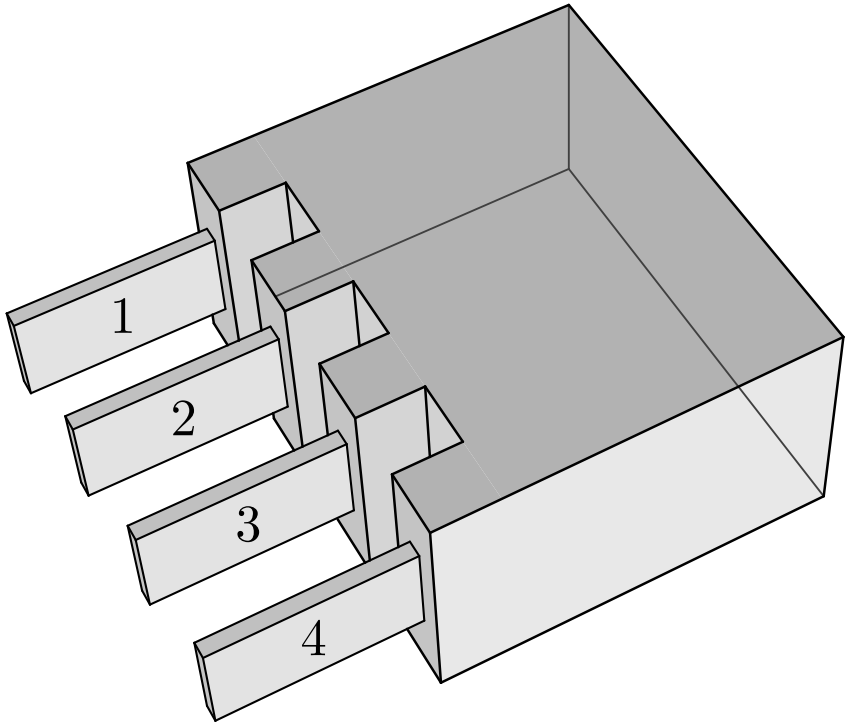

Hardness of approximation

Theorem

The minimum number of (open or closed) face guards is NP-hard to approximate within a factor of $\Omega(\log f)$.

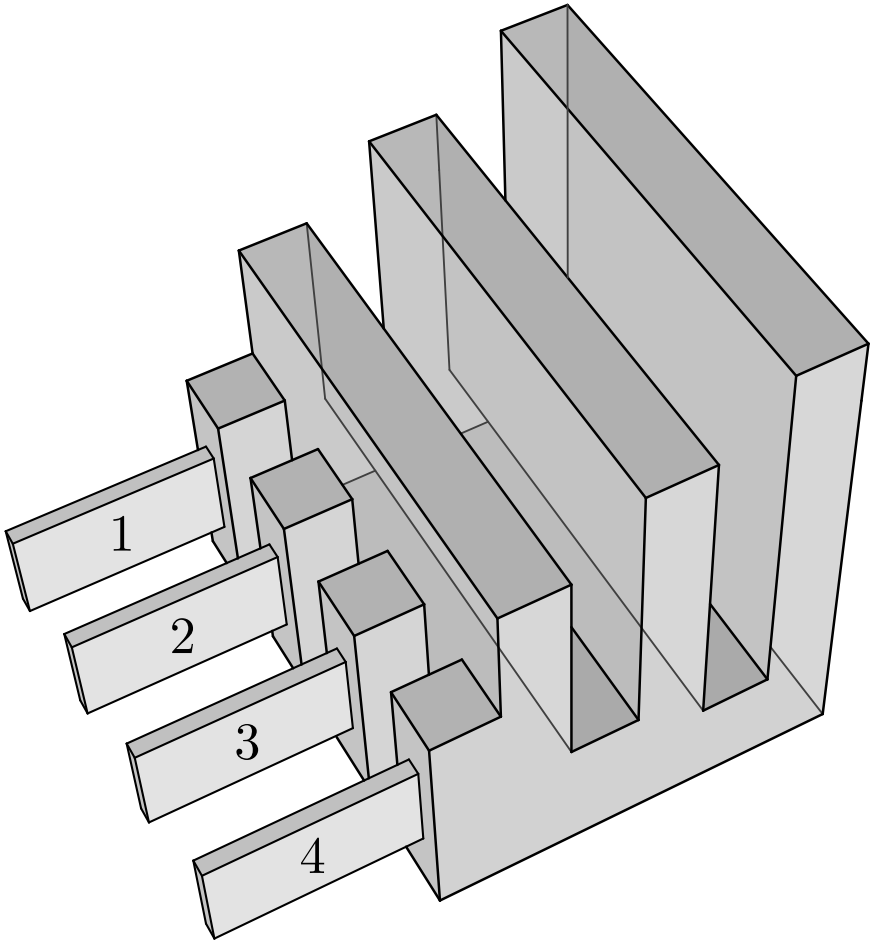

Hardness of approximation

Theorem

The minimum number of (open or closed) face guards is NP-hard to approximate within a factor of $\Omega(\log f)$.

$\mathcal{S}_1 = \{2, 4\}$

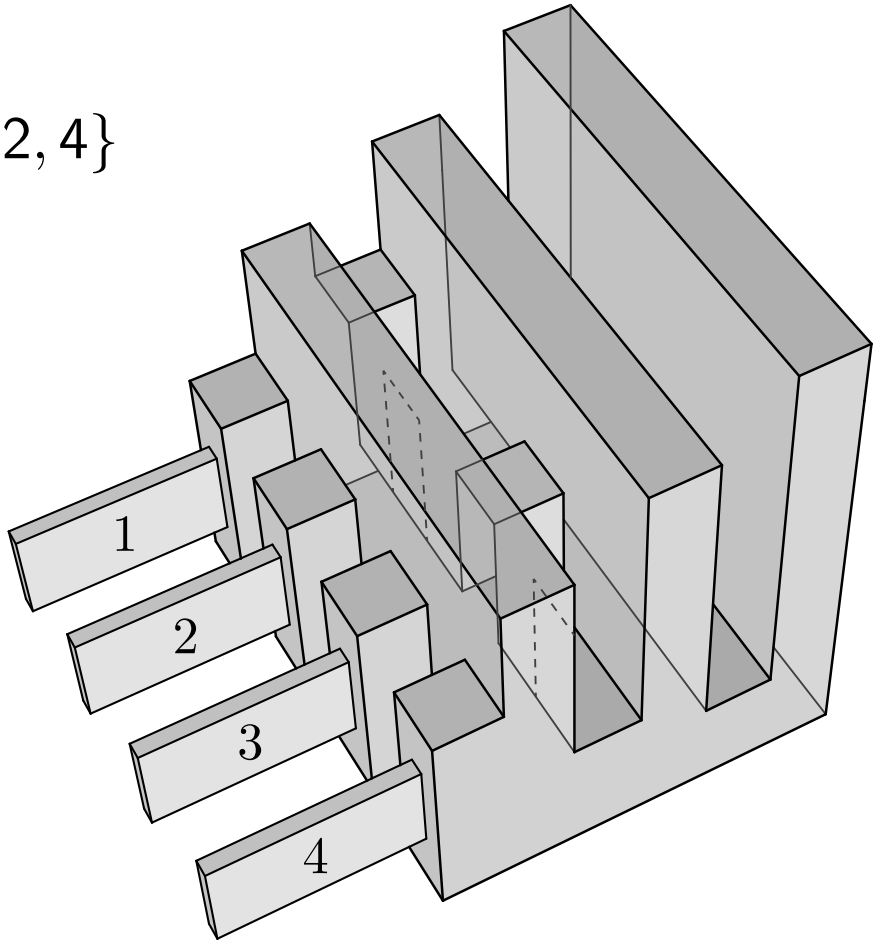

Hardness of approximation

Theorem

The minimum number of (open or closed) face guards is NP-hard to approximate within a factor of $\Omega(\log f)$.

$\mathcal{S}_2 = \{1, 3\}$

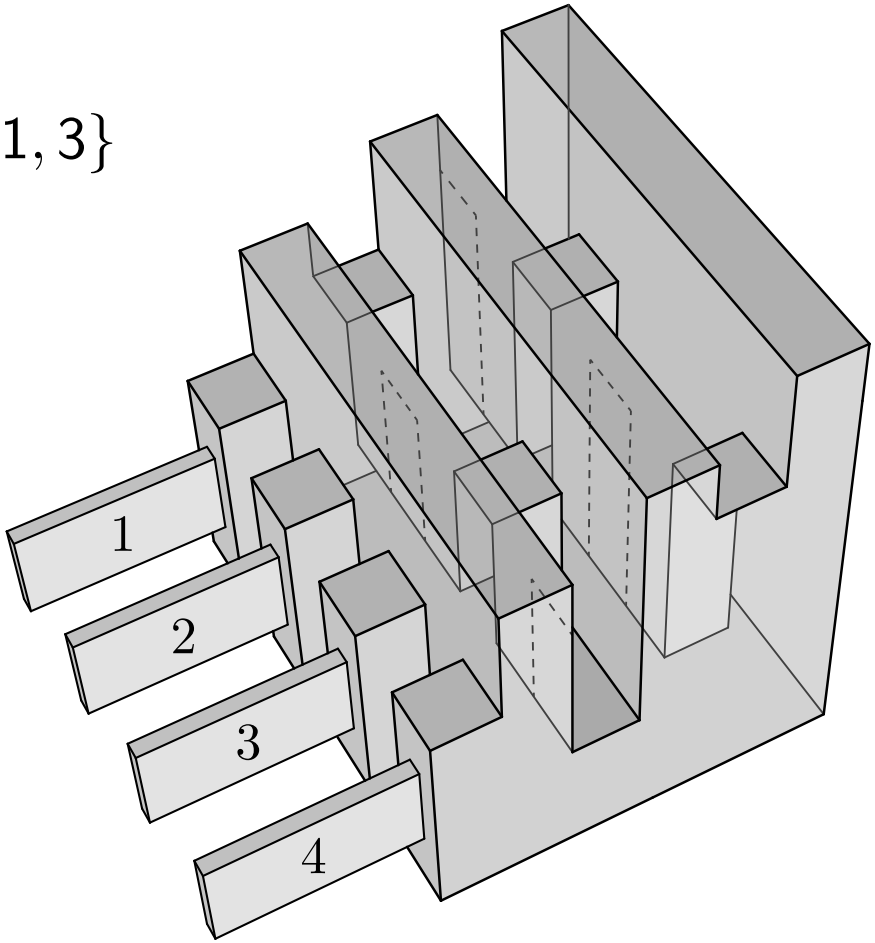

Hardness of approximation

Theorem

The minimum number of (open or closed) face guards is NP-hard to approximate within a factor of $\Omega(\log f)$.

$\mathcal{S}_3 = \{2\}$

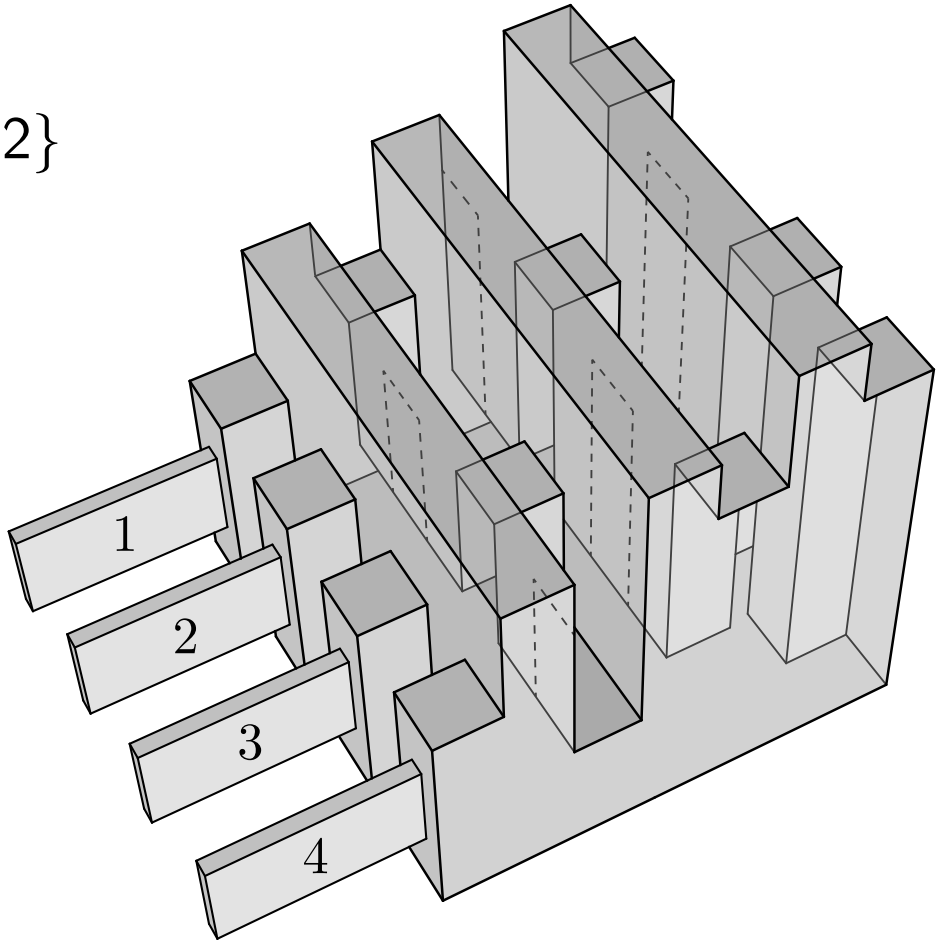

Hardness of approximation

Theorem

The minimum number of (open or closed) face guards is NP-hard to approximate within a factor of $\Omega(\log f)$.

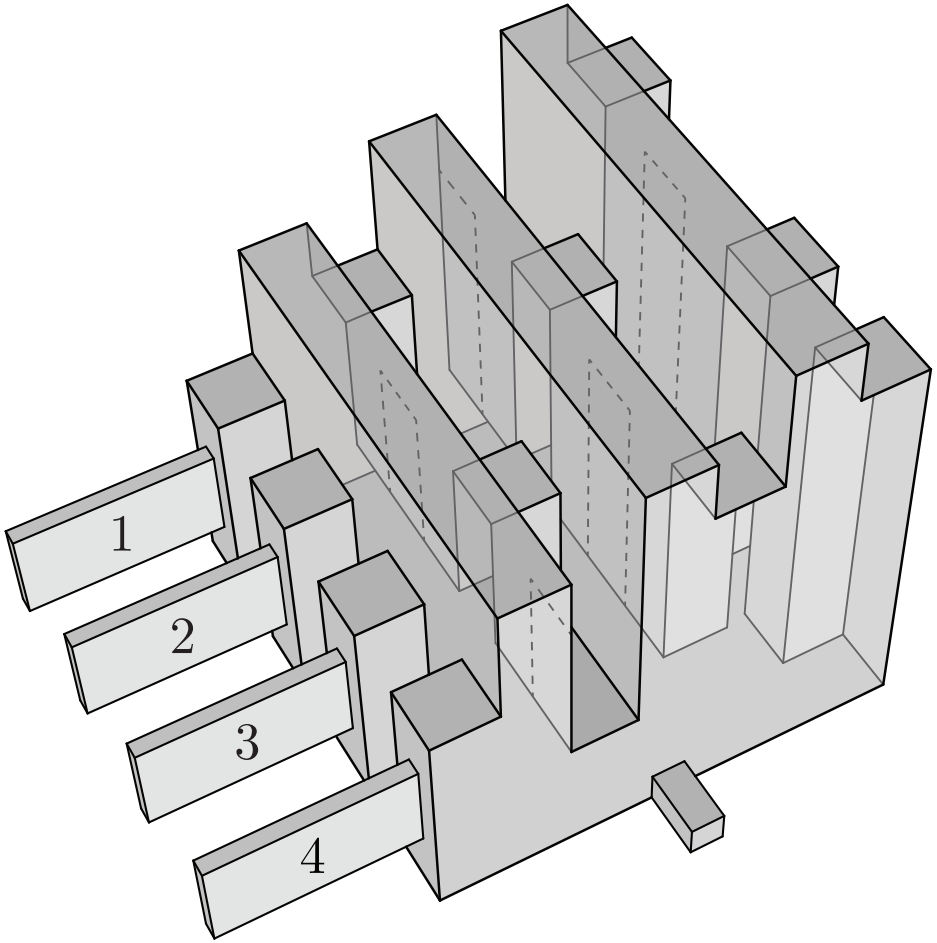

Hardness of approximation

Theorem

The minimum number of (open or closed) face guards is NP-hard to approximate within a factor of $\Omega(\log f)$.

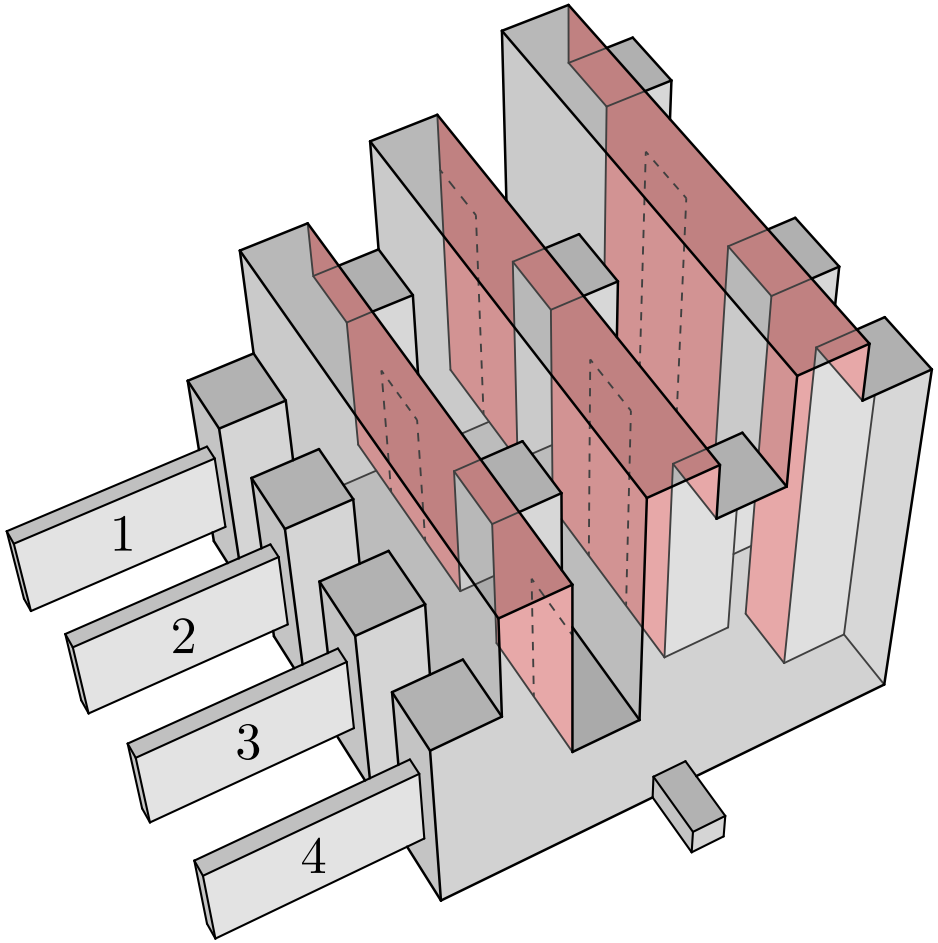

Hardness of approximation

Theorem

The minimum number of (open or closed) face guards is NP-hard to approximate within a factor of $\Omega(\log f)$.

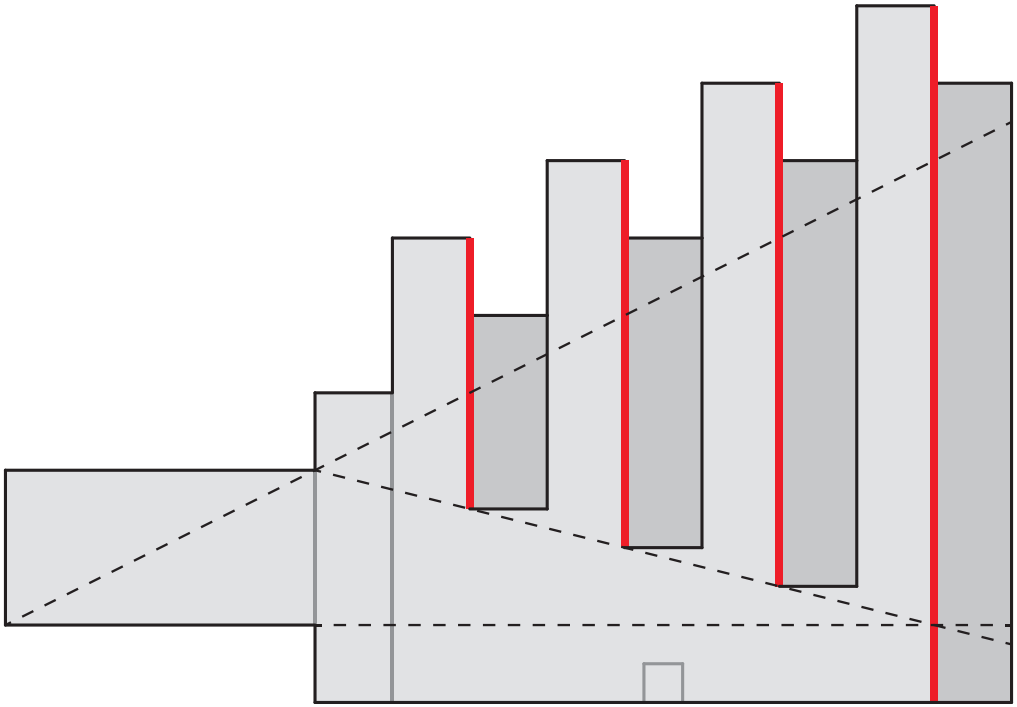

Membership in NP

Traditional approach: partition a polygon into polynomially many regions, each of which is either visible or invisible to any guard.

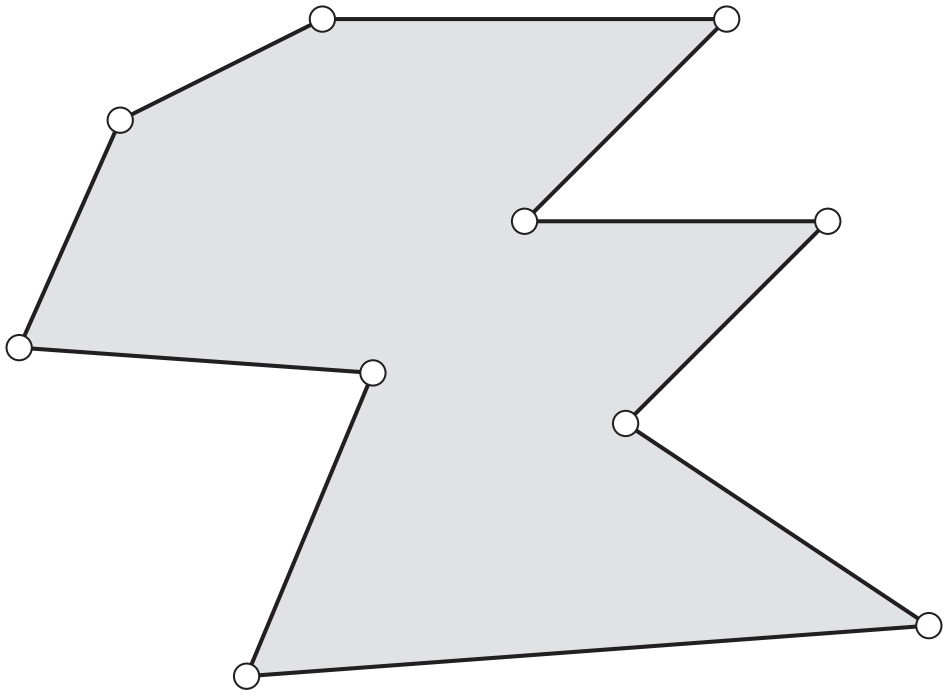

Membership in NP

Traditional approach: partition a polygon into polynomially many regions, each of which is either visible or invisible to any guard.

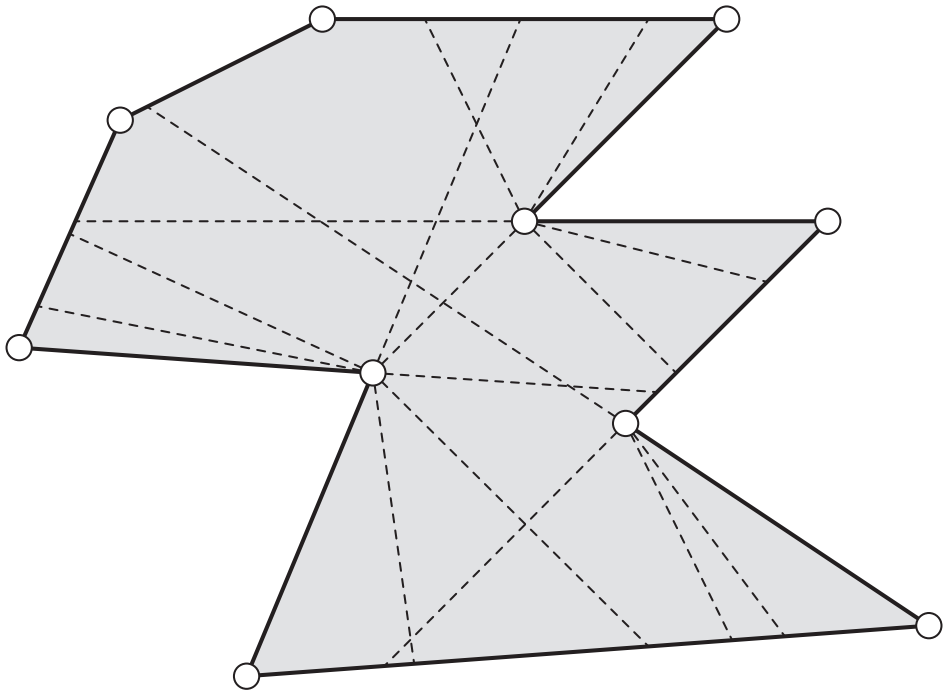

Membership in NP

Traditional approach: partition a polygon into polynomially many regions, each of which is either visible or invisible to any guard.

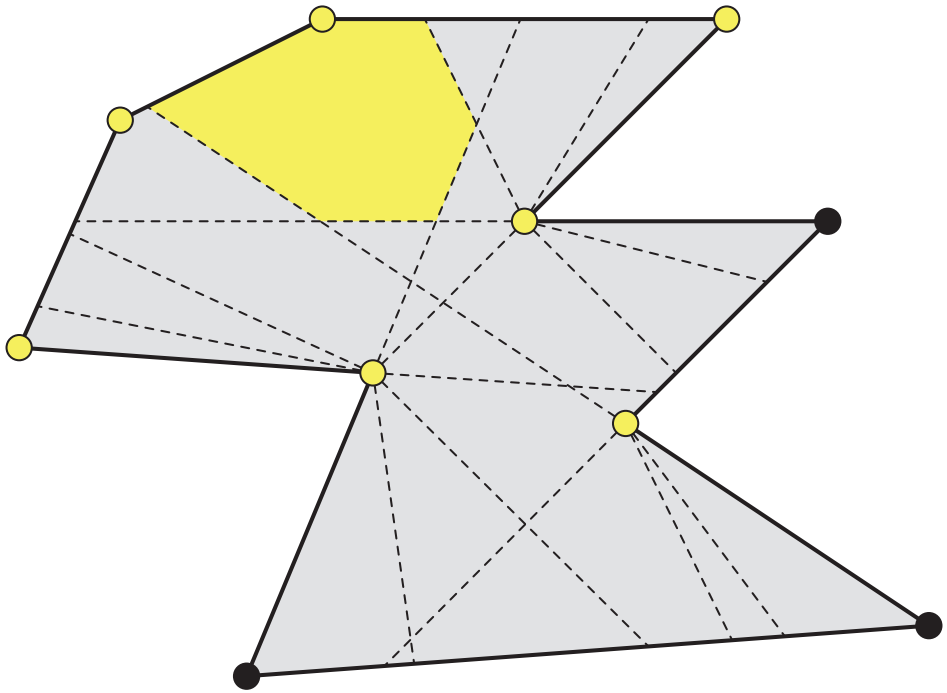

Membership in NP

Even in orthogonal polyhedra, the region visible to a face may be bounded by a quadric surface.

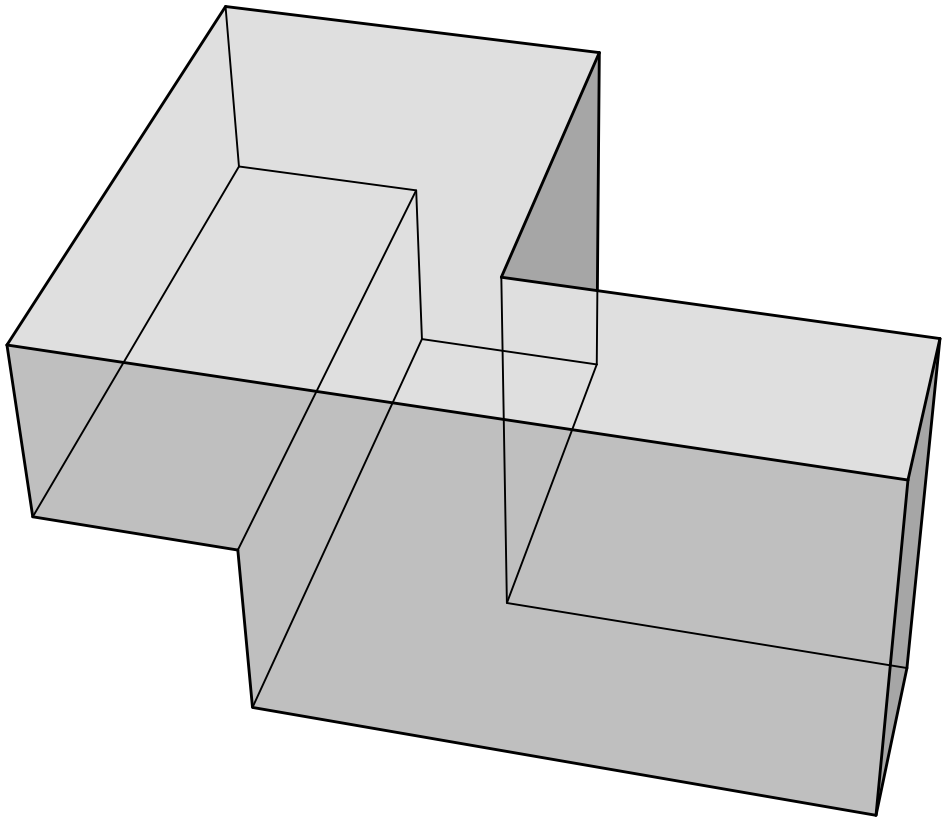

Membership in NP

Even in orthogonal polyhedra, the region visible to a face may be bounded by a quadric surface.

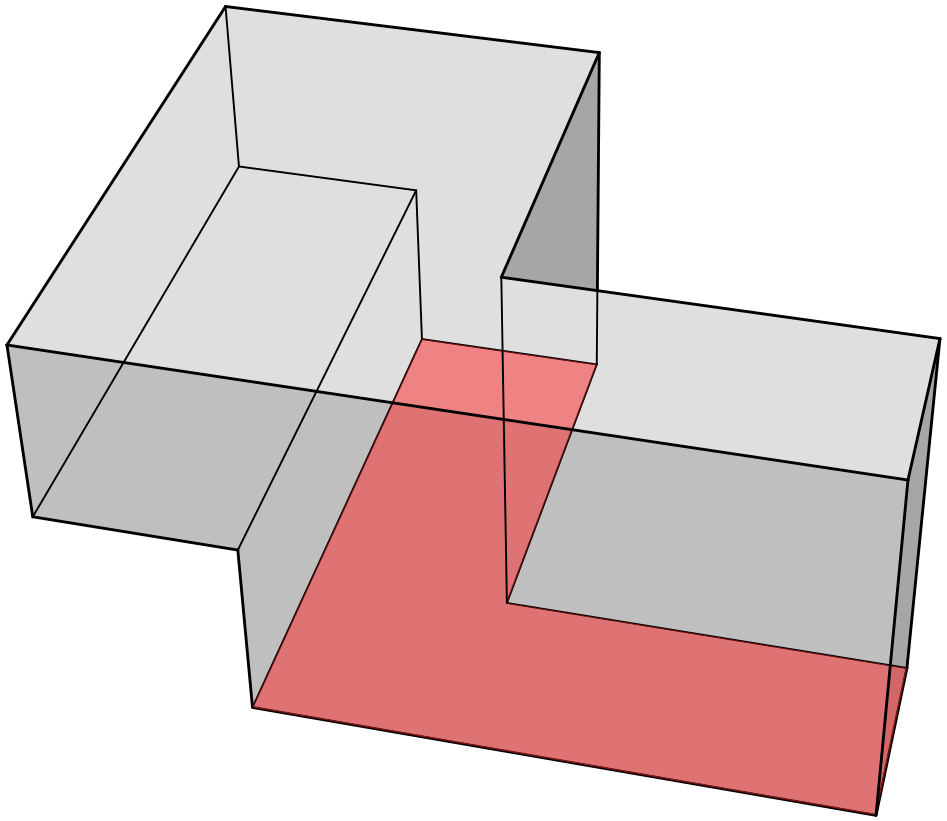

Membership in NP

Even in orthogonal polyhedra, the region visible to a face may be bounded by a quadric surface.

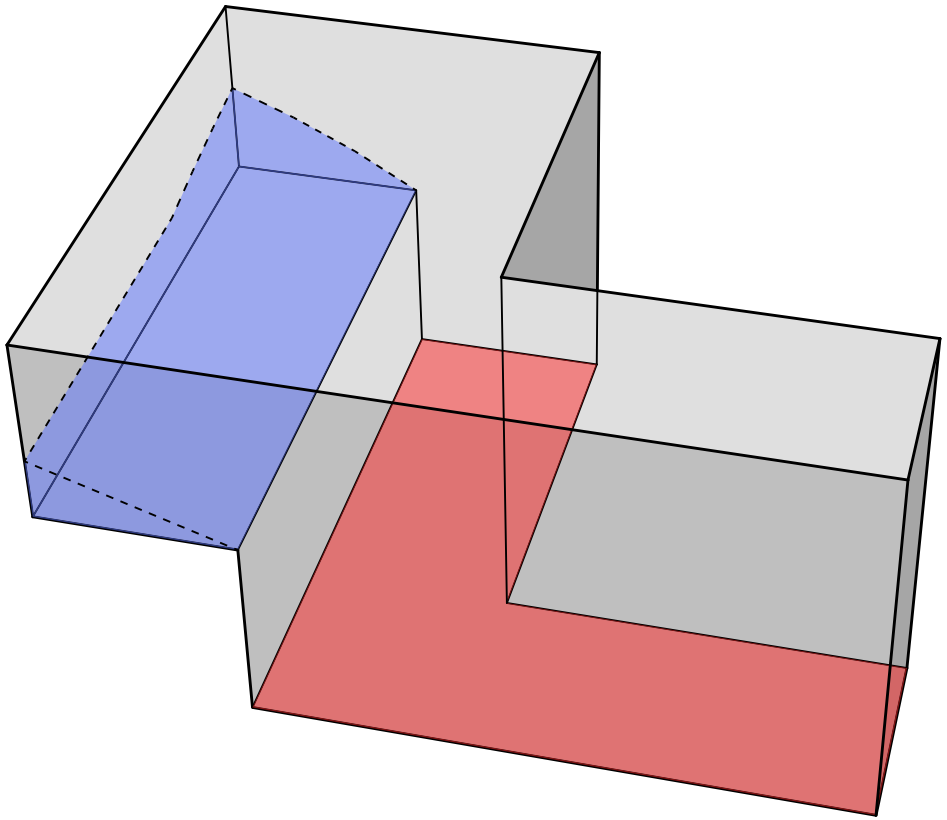

Membership in NP

Even in orthogonal polyhedra, the region visible to a face may be bounded by a quadric surface.

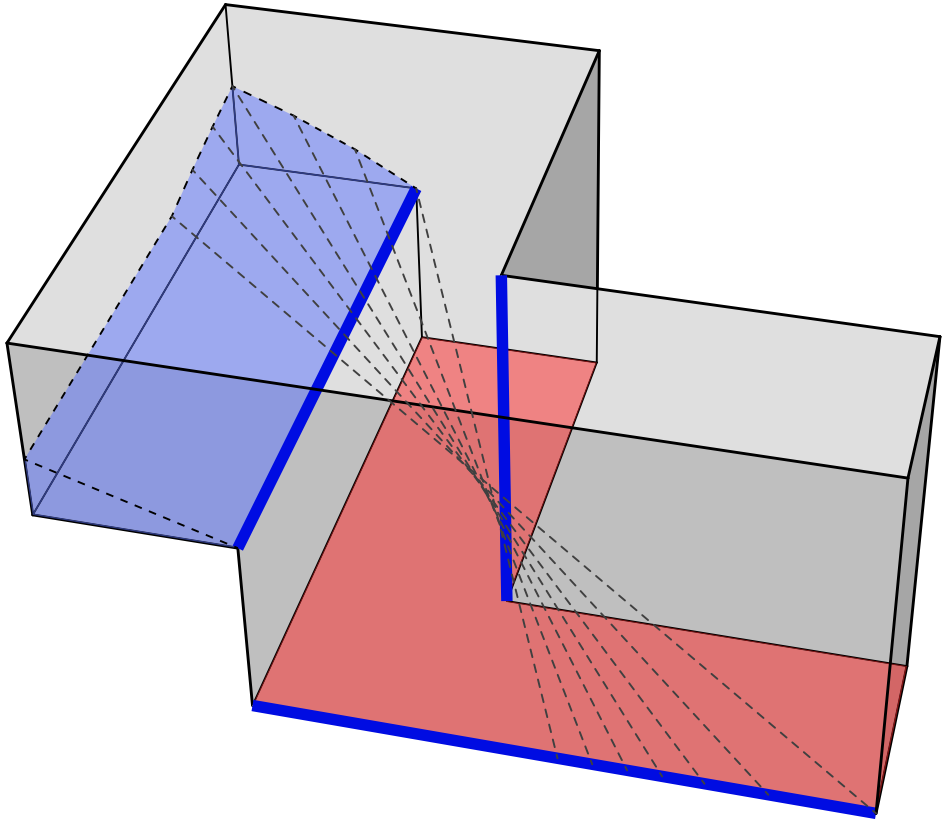

Membership in NP

The boundary of the visible area of a face is a piecewise quadric determined by lines passing through pairs or triplets of edges of the polyhedron.

The quadric surface determined by three edges may be:

- a plane, if two of the edges are parallel;
- a hyperbolic paraboloid, if the edges are parallel to a plane;
- a hyperboloid of one sheet, otherwise.

Membership in NP

The boundary of the visible area of a face is a piecewise quadric determined by lines passing through pairs or triplets of edges of the polyhedron.

The quadric surface determined by three edges may be:

- a plane, if two of the edges are parallel;
- a hyperbolic paraboloid, if the edges are parallel to a plane;
- a hyperboloid of one sheet, otherwise.

There exist algebraic methods to compute intersections of quadric surfaces, but they involve parameterizations containing radicals.

Open problems

- Is the minimization problem in NP?
  Is it $\Theta(\log f)$-approximable?
  What about its restriction to *orthogonal* polyhedra?

Open problems

- Is the minimization problem in NP?
  Is it $\Theta(\log f)$-approximable?
  What about its restriction to *orthogonal* polyhedra?

- Are $\left\lfloor \frac{\mathbf{f}}{\mathbf{7}} \right\rfloor$ closed face guards sufficient for every orthogonal polyhedron?

- Are $\left\lfloor \frac{\mathbf{f}}{\mathbf{5}} \right\rfloor$ closed face guards sufficient for every polyhedron?

- Are $\left\lfloor \frac{\mathbf{f}}{\mathbf{4}} \right\rfloor$ open face guards sufficient for every polyhedron?

References

C. Iwamoto, Y. Kitagaki, and K. Morita.
Finding the Minimum Number of Face Guards is NP-Hard.
IEICE Transactions on Information and Systems, vol. E95-D, pp. 2716–2719, 2012.

D. L. Souvaine, R. Veroy, and A. Winslow.
Face Guards for Art Galleries.
In Proceedings of the XIV Spanish Meeting on Computational Geometry, pp. 39–42, 2011.

G. Viglietta.
Guarding and Searching Polyhedra.
PhD Thesis, University of Pisa, 2012.